# Automatic Multi-Disc Shears Starting from Coil Series TZZ

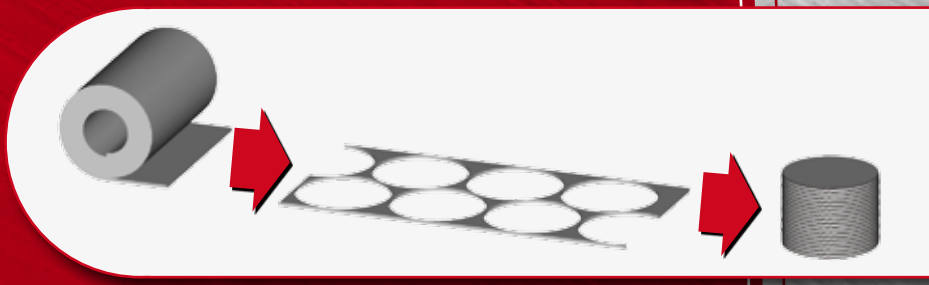

Timac
Industrial Technologies

# TIMAC

Excellence be yours

Innovative design concept, excellent technology, special performance: TIMAC machine tools represent a unique set of solutions in the field of deformation of steel.
They are the result of more than thirty years of experience, years in which the company has managed to tackle and meet the most diverse and complex market demands with creativity, expertise and state-of-the-art technology. Membership in the OMERA Group has also allowed the company to integrate many experiences related to moulds and dies and large production lines and to develop effective and efficient technological synergies.
Today, the activity of TIMAC concentrates on automatic multi-disc shears, punching machines, flanging-punching machines for tank bottoms and on different solutions of automatic lines for the cutting of discs from coil and for the application of flanges to half-shells for expansion vessels and water heaters. A range of products and services of great quality and reliability and the proven ability to meet the different demands for customization are the competitive advantages that motivate the growing national and international success of TIMAC, a company small in size but with great ideas.

# Automatic shears series TZZ: the ideal solution to produce more at lower costs..

If containing the product costs has become an absolute necessity for every company, then automatic multi-disc shears of the series TZZ by TIMAC constitute, for those working in the field, the most innovative and appropriate response.
This family of machine tools is truly the ideal solution for those who need good production records, with good quality and at affordable costs.
Their sophisticated and very fine mechanical concept ensures high reliability of operation over time.
The ease of operation and management of these shears does not require skilled personnel while the possibility of easily employing them in an automatic line from coil provides for high continuity of work.
Both in the version for cutting circles in a single line and in the multiple line zig-zag version, all the details have been carefully designed to obtain the highest hourly production rates and substantial savings in scrap steel.

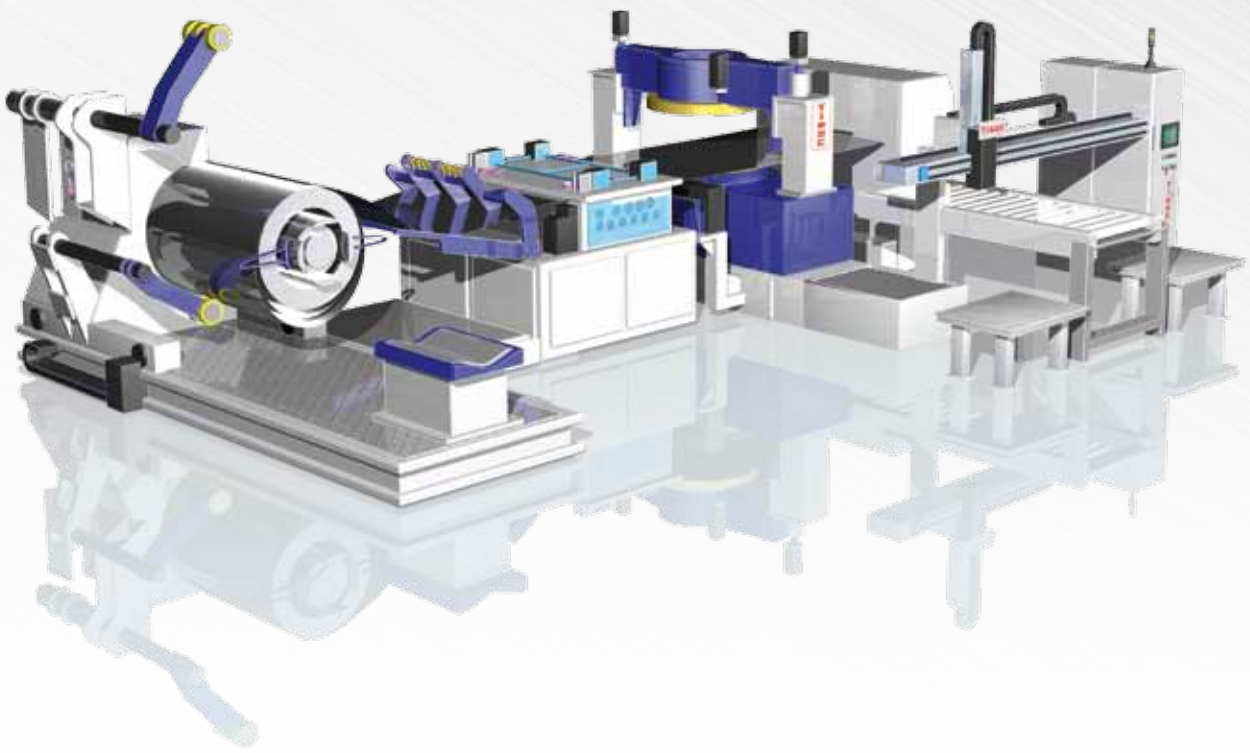

# Guiding you to the choice of a quality circle shear.

## 1 WHEN ARE CIRCLE SHEARS CONVENIENT?

Compared to the use of a mechanical press, which requires expensive cutting dies, a TZZ automatic shear is convenient for the cutting flexibility in case of circles having different diameters, since the equipment linked to the diameter is cheap or even non-existent.

## 2 WHAT ARE THE RESULTS IN TERMS OF COSTS?

The calculation is done by considering both the number of discs produced in a year and the range of diameters. The convenience, in addition to the hourly production, is determined by the saving of steel (less scrap) as is shown in the following examples:

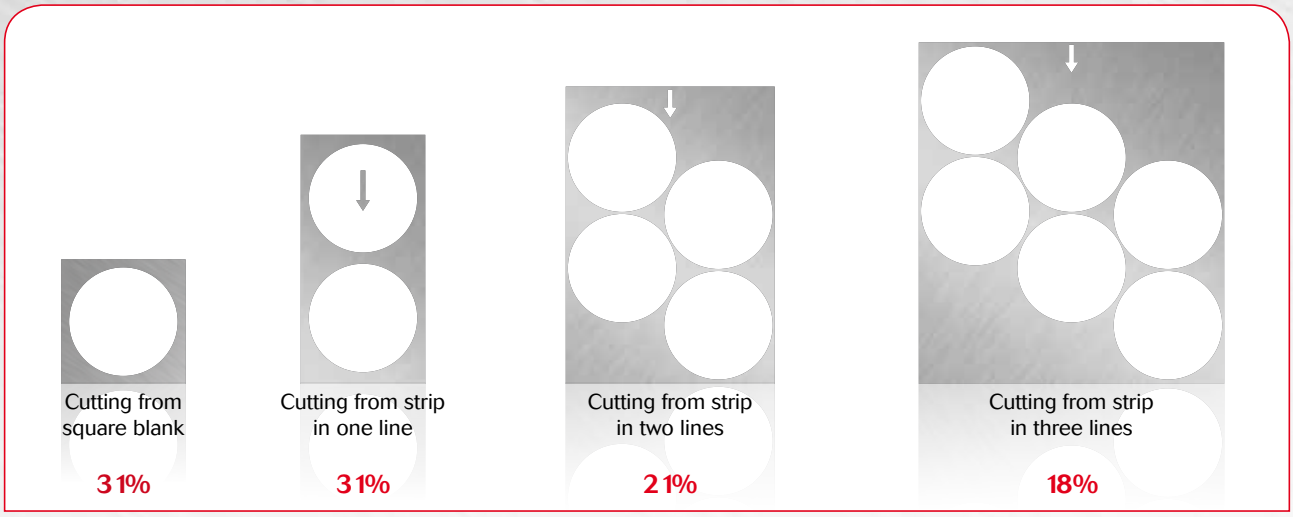


Variation of the scrap percentage depending on the number of lines.

## 3 WHICH TYPE OF CIRCLE SHEAR SHOULD I CHOOSE?

Technology by TIMAC offers two versions that meet a wide range of applications: that with a FIXED BLADE, suitable for cutting discs with diameters up to 600mm and average thickness, and the DOUBLE BLADE version, for larger diameters, up to 850mm , and also higher thicknesses.

# Why buying a timac multi-disc shear of the tzz series?

## THE ADVANTAGES

1. Savings of 7-9% in steel depending on the number of lines.
2. The disc obtained is placed onto a conveyor that can directly feed a press.
3. Good hourly production.
4. Fast and easy programming of operating parameters on touch-screen.
5. High reliability, movements by means of sliding blocks and ball screw, preloaded and lubricated for life.
6. Easy interfacing of the machine with the upstream line (decoiler, feeder etc.) and the scrap cutting machine downstream.
7. High cutting quality and long life of the blades are guaranteed by an electro-mechanical system for controlling the speed of penetration of the blades.

## THE STRUCTURE

- Electro-welded steel structure, generously sized in order to limit bends and maintain stiffness: it is important for a good cutting quality and to increase tool life.
- Cross motion of the circle cutting unit and vertical motion of the cross head are electrically operated and powered by brushless motors.
- The rotation of the blades, the technological fulcrum of this shear, is obtained by means of pinions and slewing rings with external teeth, granting high reliability and precision and powered by brushless motors.
- Even the rotary arm with suction cups gripping system for the unloading of the discs is driven by a brushless motor, in order to allow different speeds depending on the weight and size of the disc to be handled.

## THE PROGRAMMING

Thanks to a sophisticated and robust software designed to control six axes driven by brushless motors, you can program and store different parameters including:

- The belt width
- The diameter of the disc
- The number of lines (one or more).

Example of visualization of cutting on touch-screen.

# Automatic multi-disc and disc shearing machines series TZZ starting from coil.

The automatic shears of the TZZ series are equipped with transverse movement of the cutting unit, in order to obtain discs on multiple lines, thus optimizing the use of steel. The quality of cutting is guaranteed by a system for digital adjustment of the penetration of the blades. The machine functions are programmable on the panel and there is the possibility of interfacing with a feeder of steel strip, with the scrap cutting machine and with the rest of the slave equipments.

## Mod. TZZ-1254

This model is distinguished because the cutting of the disc is carried out by the rotation of two upper circular blades, arranged at 180 ° between them, turning against a ring lower blade, that is interchangeable according to the diameters and housed on the lower structure.

## Mod. TZZ-2R 1254

This model is distinguished because the cutting of the disc is carried out with a system of two circular blades mounted on opposing slewing rings, an upper one and a lower one, with synchronized electric movement, which avoid the use of the fixed lower blade.

## Mod. TZZ-F 803

This shear is designed on the basis of the model TZZ 1254: the type of cut is the same, with fixed lower blade, but being the machine without the transverse movement, the discs are cut in a single line.

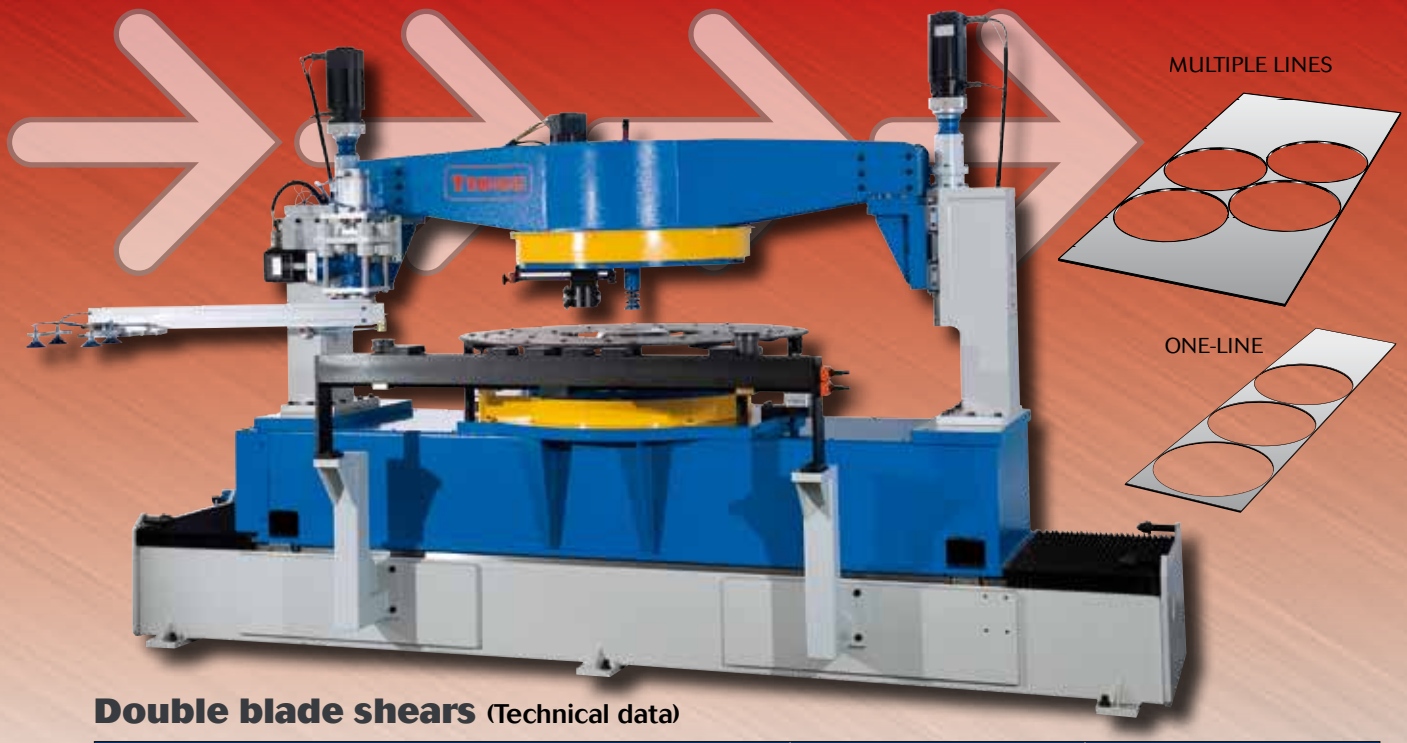


## Double blade shears (Technical data)

| MODEL | TZZ-2R 1254 | TZZ-2R 1604 |
|---|---|---|
| Material min. thickness | 1 mm | 1 mm |
| Ø min. disc | 350 mm | 450 mm |
| Ø max disc | 650 mm | 830 mm |
| Sheet max thickness (R=400 N/mm²) | 4 mm | 4 mm |
| Sheet max thickness (R=700 N/mm²) | 2 mm | 2 mm |
| Max coil width | 1250 mm | 1600 mm |
| Span between uprights | 1970 mm | 2500 mm |
| Approx. average production (pcs/h) | 400 | 400 |
| Installed power | 10 kW | 10 kW |
| Power supply | 400 V, 50 Hz, 3 P | 400 V, 50 Hz, 3 P |
| Adjustable cross stroke (max) | 700 mm | 750 mm |
| Weight (appr.) | 3500 kg | 4000 kg |

## Fixed blade shears (Technical data)

| MODEL | TZZ-1254 |
|---|---|
| Ø min. disc | 350 mm |
| Ø max disc | 650 mm |
| Sheet max thickness (R=400 N/mm²) | 4 mm |
| Sheet max thickness (R=700 N/mm²) | 1.6 mm |
| Max coil width | 1250 mm |
| Span between columns | 1970 mm |
| Average production (discs/hour) | 450 |
| Installed power | 10 kW |
| Power supply | 400 V, 50 Hz, 3 P |
| Adjustable cross stroke | 700 mm |

## Fixed blade one-line shear (Technical data)

| MODEL | TZZ-F 803 |
|---|---|
| Ø min. disc | 250 mm |
| Ø max disc | 750 mm |
| Sheet max thickness (R=400 N/mm²) | 3 mm |
| Sheet max thickness (R=700 N/mm²) | 1.6 mm |
| Max coil width | 800 mm |
| Average production (discs/hour) | 450 |
| Installed power | 8 kW |
| Power supply | 400 V, 50 Hz, 3 P |

# TZZ automatic shears show all their competitiveness in the production line.

TZZ shears are to be integrated in a production line which includes the uncoiler and the straightener-feeder and, downstream, a conveyor, the scrap cutting machine and an automatic stacker. TIMAC can provide the full line or, if this is existing already, just the shear and a feeder.

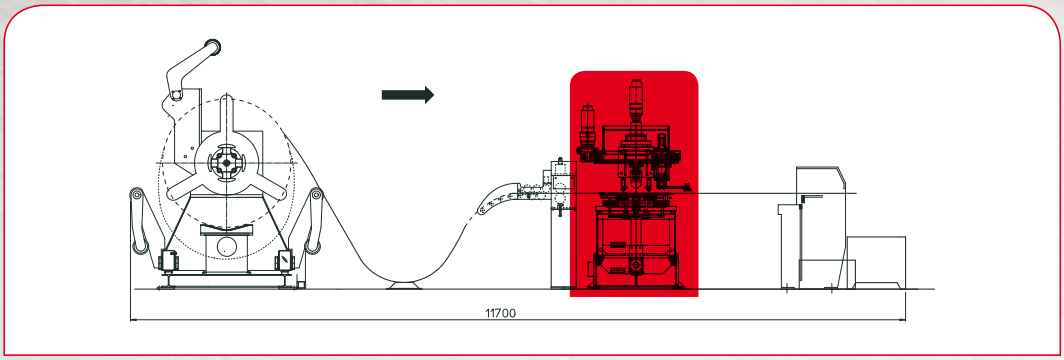


equipment for 0.5-2mm-thick steel

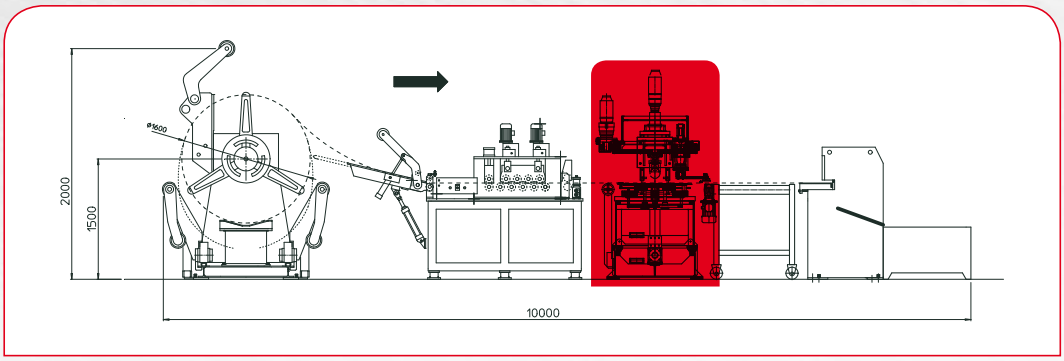


equipment for 3,5-mm-thick steel, max coil width 1250mm

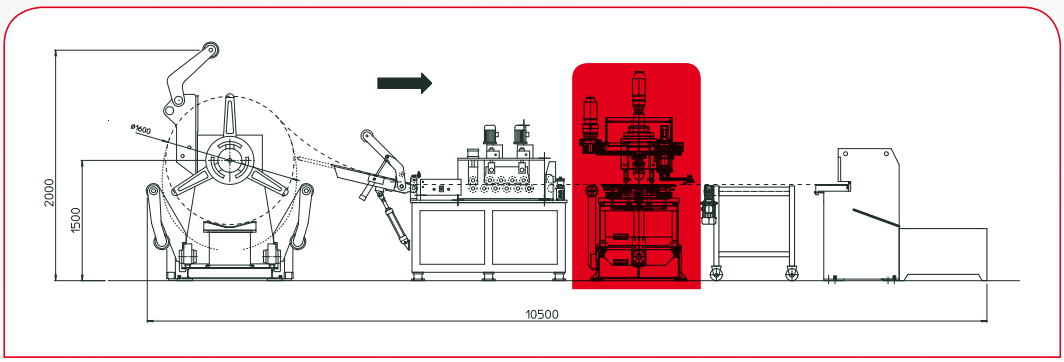


equipment for 3,5-mm-thick steel, max coil width 1600mm

# Accessories for TZZ shears.

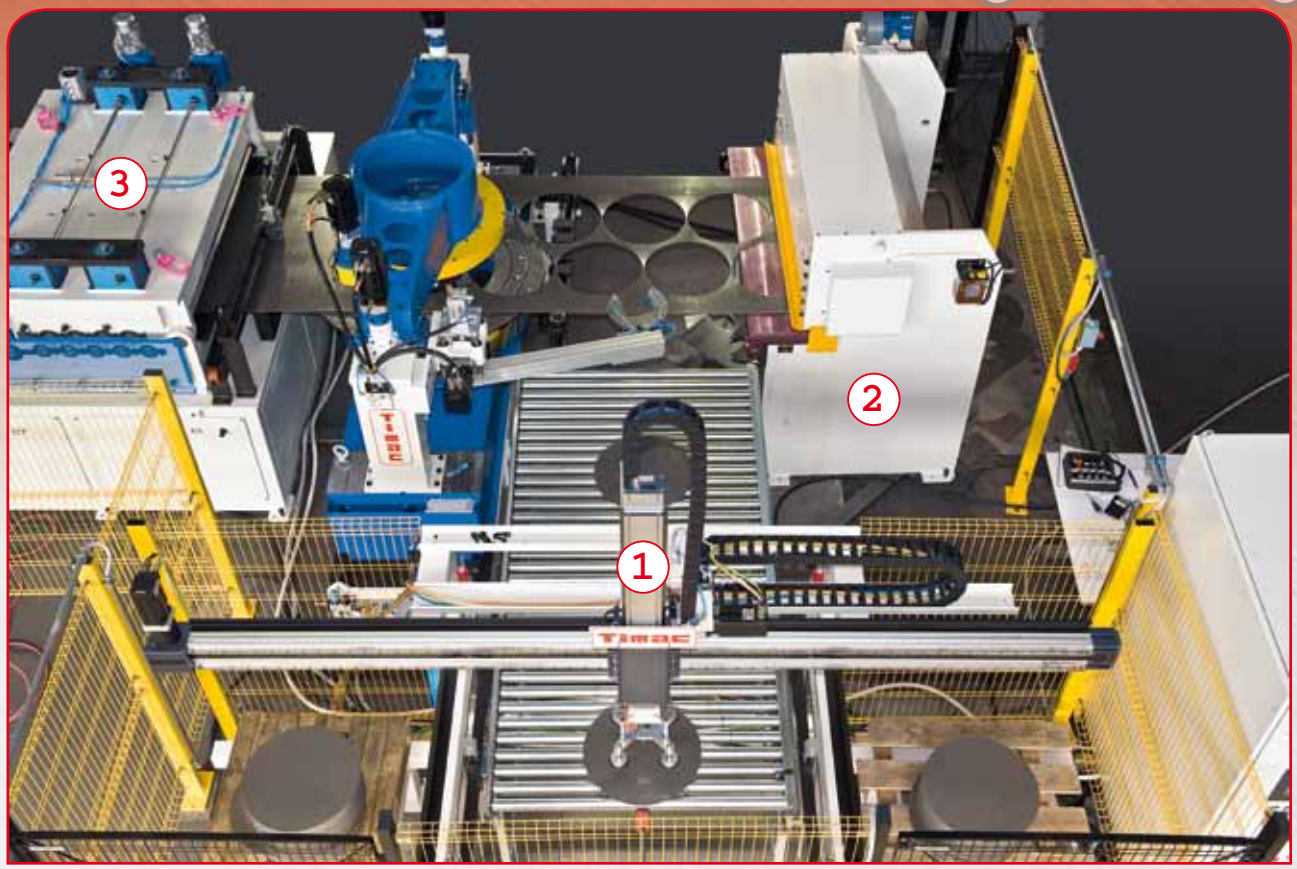


## 1. STACKER

The simple stacking system, purposely designed for TZZ shears, optimizes movements and simplifies the handling of the outcoming discs at a reasonable cost.

Main features:

- N°. 1 motorized roller conveyor, equipped with mechanical retains for centering purposes.
- N°. 2 stationary platforms, one working and one awaiting, placed at the right and left hand sides of the roller conveyor.
- N°. 1 crossbar holding a suction cup pad, complete with horizontal and vertical movements to pick and place the discs on the stack. A sensor placed centrally among the suction cups permits to adjust the disc release height depending on the stack present on the platform below.

## 2. Guillotine scrap shear .

A linear shear to be placed at the exit of a TZZ circular shear to trim off scrap and drop it into a container. The control can be done through the touch-screen of the circular shear.

| | for TZZ 1254 | for TZZ 1604 |
|---|---|---|
| Max. belt width | 1250 mm | 1600 mm |
| Max. belt thickness | 5 mm | 5 mm |
| Strokes/min. (max.) | 8-10 | 8-10 |

## Straightener-feeder .

A roller straightener to be placed before a TZZ circular shear to straighten the sheet metal arriving from a closely positioned decoiler. The control can be done through the touch-screen of the circular shear.

Main features:

- N°. 2 motorized pinch rolls at the inlet;
- Opening and closing of the pinch rolls: pneumatic;
- Roller diameter (straightening and pinch): 100 mm;
- Adjustable feeding pitch, measured by means of an encoder placed over the metal strip.

| | for TZZ 1254 | for TZZ 1604 |
|---|---|---|
| Max. belt width | 1300 mm | 1600 mm |
| Material thickness (R=600 N/mm2) | 1-3.3 mm | 1-3.5 mm |
| Accuracy | ±0.1 mm | ±0.1 mm |
| N° of rollers | 2 + 7 + 2 | 2 + 9 + 2 |

## 3. Electronic feeder.

A sheet metal feeder to be placed before a TZZ circular shear: a roller conveyor with an adjustable, self-centering guide for the strip supports the metal sheet coming from a decoiler and guides it to the pinch rolls, which are driven by a brushless motor. An encoder is installed over the sheet metal to regulate the feeding pitch. The control of the sheet metal feeding can be done through the touch-screen of the circular shear.

A small calander can be added in order to straighten low thicknesses.

| | per TZZ 1254 | per TZZ 1604 |
|---|---|---|
| Max. belt width | 1300 mm | 1600 mm |
| Max. material thickness (R=450 N/mm$^2$) | 3 mm | 4 mm |

timac

by

OMERA

36015 Schio (VI) Italy • via Lago di Costanza, 47
Tel. +39 0445 576030 • Fax +39 0445 575288
www.timacsrl.it • commerciale@timacsrl.it