www.dmgmori.com

DMG MORI

CTV 160 / 250
CTV 160 / 250 / 315 *linear*
CTV 250 DF

Vertical Production Turning

CTV Series

CTV Series

CTV – one concept in four models for all production requirements.

CTV 160 / 250 – vertical production turning

+ A design fully suited to production with optimal accessibility for automation and interconnection
+ The lowest space requirements in this class thanks to the modern STEALTH design with integrated 15" DMG MORI SLIM*line*® panel and a footprint of just 115.2 ft.² including chip conveyor and automation
+ Automation with a trailing prism conveyor belt for up to 40 workpieces as standard

Automotive: Drive flange manufactured on a CTV 160 // 41CrMo4 // 55 / 45 sec (OP10 / OP20)

Automotive: Gear wheel manufactured on a CTV 160 // 42CrMo4 // 35 / 38 sec (OP10 / OP20)

CTV 160 / 250 (*linear*) – machining of complex workpieces with integrated Y-axis

+ Highest level of flexibility when machining average quantities of complex workpieces thanks to the Y-axis with ±3.5 in. travel (CTV 250: +3.5 / –2.6)
+ Highest precision and long-term accuracy thanks to the linear drive in the X-axis (optional)
+ Optional automation in form of a trailing prism conveyor belt or disc-type magazine

Machine construction: Coupling manufactured on a CTV 160 *linear* // 16MnGS // 75 / 68 sec (OP10 / OP20)

Machine construction: Connection flange manufactured on a CTV 250 *linear* // CK45 // 258 / 212 sec (OP10 / OP20)

CTV 315 *linear* – machining of large workpieces ø 11.8 in.

+ Highest precision and long-term accuracy thanks to the linear drive in the X-axis with 1 g. acceleration
+ Machining of complex workpieces thanks to the optional Y-axis with ±2.0 in. travel
+ 12-station VDI 40 turret, optionally available as Direct Drive or as a VDI 50 turret with 29.5 ft./lbs. torque

Machine construction: Flywheel manufactured on a CTV 315 *linear* // GGG 30 // 67 / 58 sec (OP10 / OP20)

Machine construction: Flange manufactured on a CTV 315 *linear* // CK45 // 120 / 40 sec (OP10 / OP20)

CTV 250 DF – vertical 5-axis production turning and milling

+ Vertical turning and milling center for complete machining of all components for CV joints on one machine
+ Highest dynamics thanks to the drive of the turn-mill swiveling tool carrier (DF) as Direct Drive with 90 rpm., swivel range +105 / –45°
+ Machine-integrated automation with optional workpiece feeding and removal

Automotive: Ball hub manufactured on a CTV 250 DF // 20MnCr5 // 24 sec.

Automotive: Housing manufactured on a CTV 250 DF // CF53 // 30 sec.

Spacious work area

+ Use of large chucks up to ø 12.4 in
(CTV 160: ø 8.7 in. // CTV 250: ø 10.2 in.)
+ CTV 160 / 250: Multi-function plate for up to two additional tools, one for internal and one for external machining (external machining only with Y-axis)
+ CTV 315 *linear*: The multi-function plate can also be used for driven (multiple) tools or a milling spindle

04

Liquid-cooled integrated spindle motors

+ Highest long-term accuracy thanks to liquid-cooled drives for maximum temperature stability
+ Greatest stability thanks to the use of the largest spindle bearing in its class:
CTV 160: ø 3.9 in. diameter of the front bearing
CTV 250: ø 4.7 in. diameter of the front bearing
CTV 315: ø 5.1 in. diameter of the front bearing

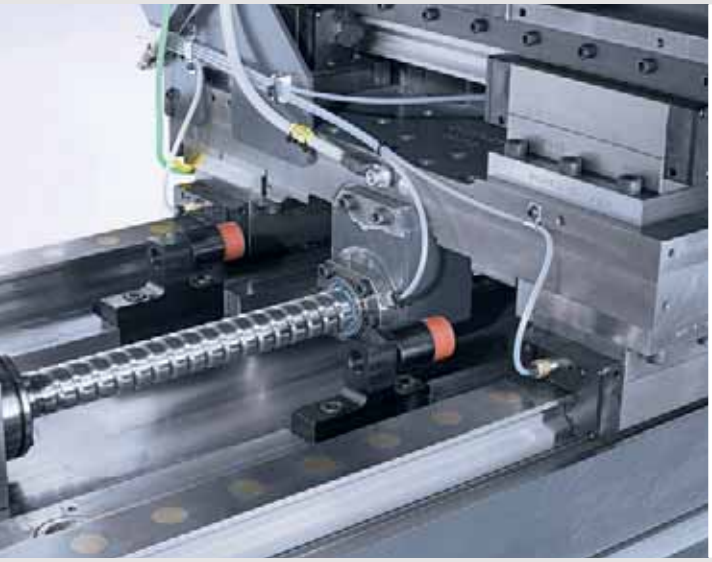

Maximum stability and long-term accuracy

+ Maximum precision thanks to direct measuring systems on all linear axes as standard
+ Highest stability thanks to large roller guides and ball screws mounted on both sides:
CTV 160 / 250: 1.8 in. roller guides and ø 1.3 in. ball screws
CTV 315 *linear*: 1.8 in. roller guides and ø 1.6 in. ball screws
+ 60% less friction and 50% greater rigidity thanks to roller guides instead of ball guides

CTV – shortest production times with advanced technology.

Integrated automation solutions

+ Increased productivity with an integrated trailing prism conveyor belt: up to 40 positions for workpiece diameters of up to ø 11.8 in. with the CTV 315 *linear*, no mechanical conversion necessary; component sizes can easily be changed using the control
+ Alternative automation in form of a disc-type magazine for the CTV 160 / 250 (*linear*) with height adjustment and minimal space requirements
+ CTV 250 DF with shuttle and steel link chain for feeding and removing workpieces

Automation tailored to the customer

+ Workpieces are fed and removed based on customer specifications, e.g. via shuttle, steel link chain conveyors, pallet accumulation conveyors or robots
+ Connection of several machines via belt systems including the integration of turning stations or, alternatively, as robot cells
+ Integration of additional processes such as measuring, washing, deburring etc.

CTV Series

CTV – vertical production turning of workpieces up to ø 8.7 in. and 7.9 in. in height.

+ Machine configuration with automation on the right or left hand side
+ Automation in form of an integrated trailing prism conveyor belt for short loading times and no mechanical conversion when switching workpieces (via the control system instead) as standard
+ Spacious work area for additional tools on the multi-function plate and larger (special) chucks
+ 12-pocket VDI 30 turret (CTV 250: VDI 40), driven tools with 4,000 rpm. optional
+ Machines are 100% ready for production, including automation, chip conveyor, linear scales and 4-color signal lamp

NEW: CTV 160 / 250 in our STEALTH design

1 **Space-saving design**
thanks to an integrated trailing prism conveyor for up to 40 workpieces and a footprint of just 115.2 ft.²

2 **Optimal accessibility**
thanks to the 21.7 in. wide door

3 **Optimal view**
of the work area through large windows

4 **DMG MORI SLIM*line*® panel**
with a 15" display and SIEMENS 840D solutionline operate // TRANSLINE optional

Workpiece loading and unloading

+ Trailing conveyor for up to 40 workpieces or workpiece diameters of up to ø 8.7 in. (CTV 160 up to ø 6.3 in.) as standard
+ Additional linear belts, robot automation and connection of multiple machines are optional
+ Dual-track loading and unloading of components up to ø 3.9 in. possible
  – Separation of raw and finished components
  – Shorter loading and unloading times

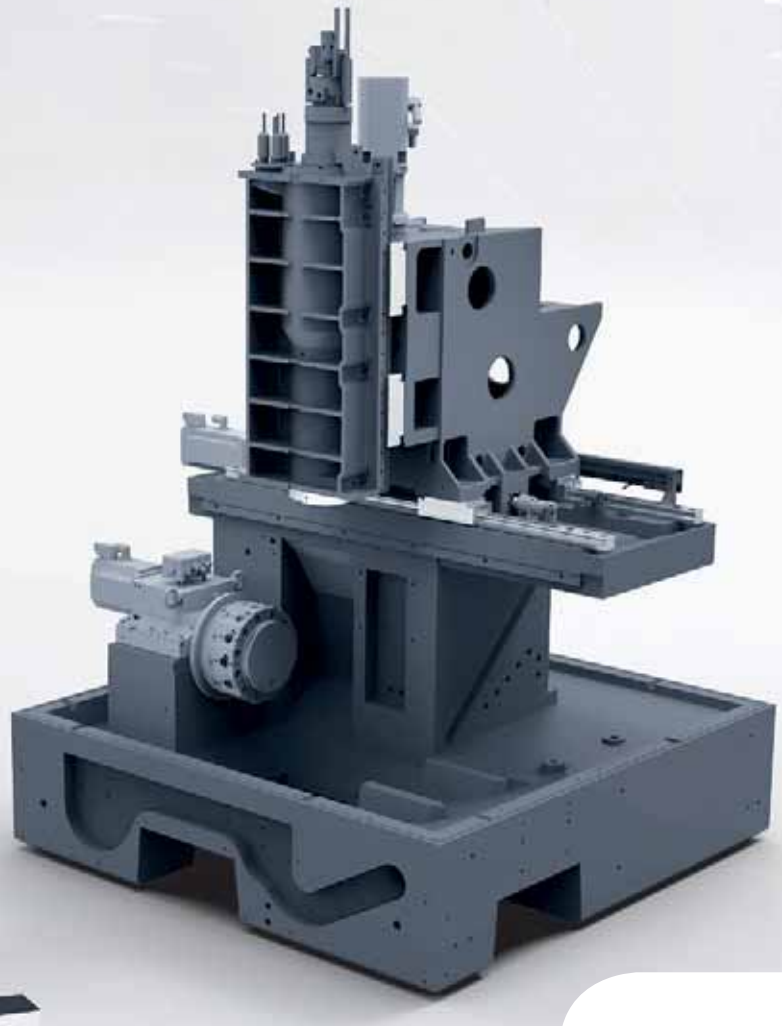

Highlights CTV 160 / 250

+ **Highest stability**
  – Consistent rigidity thanks to robust size 45 linear guides and ø 1.3 in. ball screws
  – Single-piece Z slide
  – Widely spaced linear guides 16.7 in. on the X-axis 13.4 in. on the Z-axis
+ **Large spindle bearing** for maximum machining stability ø 3.9 in. with the CTV 160 ø 4.7 in. with the CTV 250
+ **Optimized chip fall** thanks to free downward chip fall
+ **Maximum precision** thanks to direct measuring systems on all linear axes
+ **Thermal stability** thanks to the liquid-cooled main spindle

		CTV 160	CTV 250 (160)*
Production – for medium and large batch sizes			
Maximum workpiece diameter	in.	ø 6.3	ø 8.7
Maximum workpiece height	in.	6.3 (7.9)*	6.3 (7.9)*
Maximum swing diameter	in.	ø 8.7	ø 12.6
Maximum chuck diameter	in.	ø 8.7	ø 10.2
X / Z travel	in.	28.5 / 11.8	28.5 / 11.8
Turret		12 × VDI 30	12 × VDI 40
Automation in form of a trailing prism conveyor belt	# / in.	36 × ø 2.8 27 × ø 3.3 24 × ø 4.7 18 × ø 6.3 –	40 × ø 2.8 30 × ø 3.3 24 × ø 4.7 20 × ø 6.3 16 × ø 8.7

* Optional

CTV Series

CTV – machining of complex workpieces with an integrated Y-axis.

+ Eccentric machining thanks to ± 3.5 in. Y-axis travel
+ Machine configuration with automation on the right or left hand side
+ Automation in form of an integrated trailing prism conveyor or disc-type magazine is optional
+ Spacious work area for additional tools on the multi-function plate and large (special) chucks
+ 12-pocket VDI 30 turret (CTV 250: VDI 40), driven tools with up to 4,000 rpm. are optional
+ DMG MORI ERGO*line*® control with 19" display and SIEMENS 840D solutionline Operate with ShopTurn 3G (optional) for the use of exclusive DMG MORI technology cycles (optional)

		CTV 160 (*linear*)	CTV 250 (*linear*)
Universal – for small and medium batch sizes			
Maximum workpiece diameter	in.	ø 6.3	ø 8.7
Maximum workpiece height	in.	6.3 (7.9)*	6.3 (7.9)*
Maximum swing diameter	in.	ø 8.7	ø 12.6
Maximum chuck diameter	in.	ø 8.7	ø 10.2
X / Y / Z travel	in.	24.4 / ±3.5 / 11.8	25.6 / +3.5, –2.4 / 11.8
Turret		12 × VDI 30	12 × VDI 40
Automation* in form of a trailing prism conveyor belt	# / in.	40 × ø 2.8 30 × ø 3.3 24 × ø 4.7 20 × ø 6.3 –	40 × ø 2.8 30 × ø 3.3 24 × ø 4.7 20 × ø 6.3 16 × ø 8.7
Automation* in form of a disc-type magazine	# / in.	20 × ø 6.3	16 × ø 8.7 (24 × ø 5.9)*

* Optional

Highlights CTV 160 / 250 (*linear*)

+ **Highest stability**
  – Consistent rigidity thanks to robust size 45 linear guides and ø 1.3 in. ball screws
  – Widely spaced linear guides
    16.7 in. on the X-axis
    13.4 in. on the Z-axis
+ **Large spindle bearing** for maximum machining stability
  ø 3.9 in. with the CTV 160
  ø 4.7 in. with the CTV 250
+ **Optimized chip fall**
  thanks to free downward chip fall
+ **Maximum precision**
  thanks to direct measuring systems on all linear axes
+ **Thermal stability**
  thanks to the liquid-cooled main spindle

Highest long-term accuracy thanks to the linear drive

+ Maintenance-free optional linear drive on the X-axis for highest long-term accuracy
+ 60 month guarantee on the linear drive

Workpiece loading and unloading

+ Trailing prism conveyor belt for up to 40 workpieces or up to ø 8.7 in. (CTV 160 up to ø 6.3 in.)
+ Disc-type magazine for up to 24 workpieces or up to ø 8.7 in. (CTV 160: 20 x ø 6.3 in.)
+ Additional linear belts, robot automation and connection of multiple machines are optional

Automation in form of a disc-type magazine – loading with Y-axis

+ Short loading and unloading times using the Y-axis

CTV 160 (*linear*)

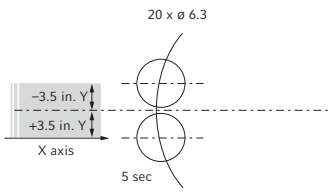

CTV 250 (*linear*)

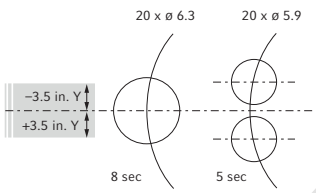

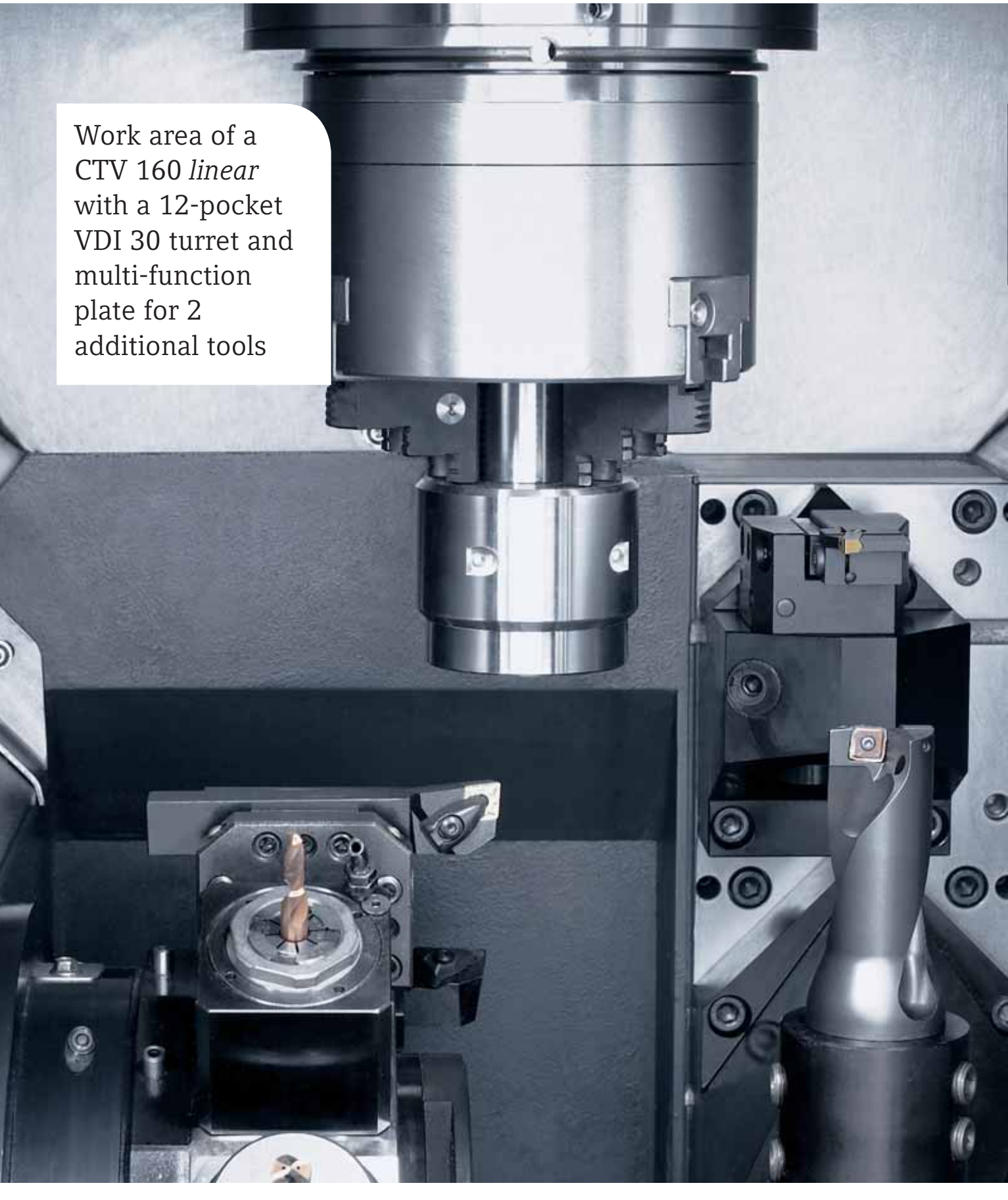

Work area of a CTV 160 *linear* with a 12-pocket VDI 30 turret and multi-function plate for 2 additional tools

CTV 315 *linear* – machining of large workpieces up to ø 11.8 in.

+ Highest precision and long-term accuracy thanks to the linear drive on the X-axis with 1 g. acceleration
+ Spacious work area for additional tools or a milling spindle on the multi-function plate and larger (special) chucks
+ Machining of complex workpieces thanks to the optional Y-axis with ±2.0 in. travel over the turret
+ 12-pocket VDI 40 turret (VDI 50 also available), optional driven tools with up to 4,000 rpm. or Direct Drive turret with up to 10,000 rpm.
+ Machine configuration with automation on the right or left hand side
+ Optional customer-specific automation, e.g. an integrated trailing prism conveyor for workpieces up to ø 11.8 in.
+ Modern STEALTH design with integrated 15" DMG MORI SLIM*line*® panel and SIEMENS 840D solutionline Operate // TRANSLINE optional

STEALTHDESIGN

		CTV 315 *linear*
Universal – for small and medium batch sizes		
Maximum workpiece diameter	in.	ø 11.8
Maximum workpiece height	in.	8.3
Maximum swing diameter	in.	ø 13.4
Maximum chuck diameter	in.	ø 12.4
X / Y / Z travel	in.	43.3 / ±2.0 / 11.8
Turret		12 × VDI 40 (VDI 50*)
Automation* in form of a trailing prism conveyor	# / in.	52 × ø 80 26 × ø 5.1 13 × ø 9.1 (with use up to ø 11.8)

* Optional // Automation also available as an accumulation conveyor

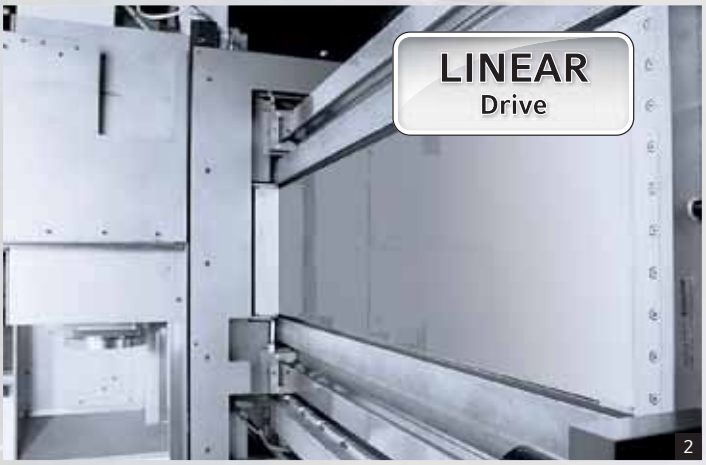

1 Automation tailored to the customer

+ Optional trailing prism conveyor belt for up to 52 workpieces or up to ø 11.8 in.
+ Additional linear belts, robot automation and connection of multiple machines are optional

2 Linear drive for 1 g. acceleration

+ Maintenance-free linear drive on the X-axis with 1 g. acceleration as standard, for highest dynamics and long-term accuracy
+ 60 month guarantee on the linear drive

3 Large work area for workpieces up to ø 11.8 in.

+ Workpieces up to 11.8 in. in diameter and 8.3 in. in height
+ Multi-function plate for additional (driven) tools or a milling spindle

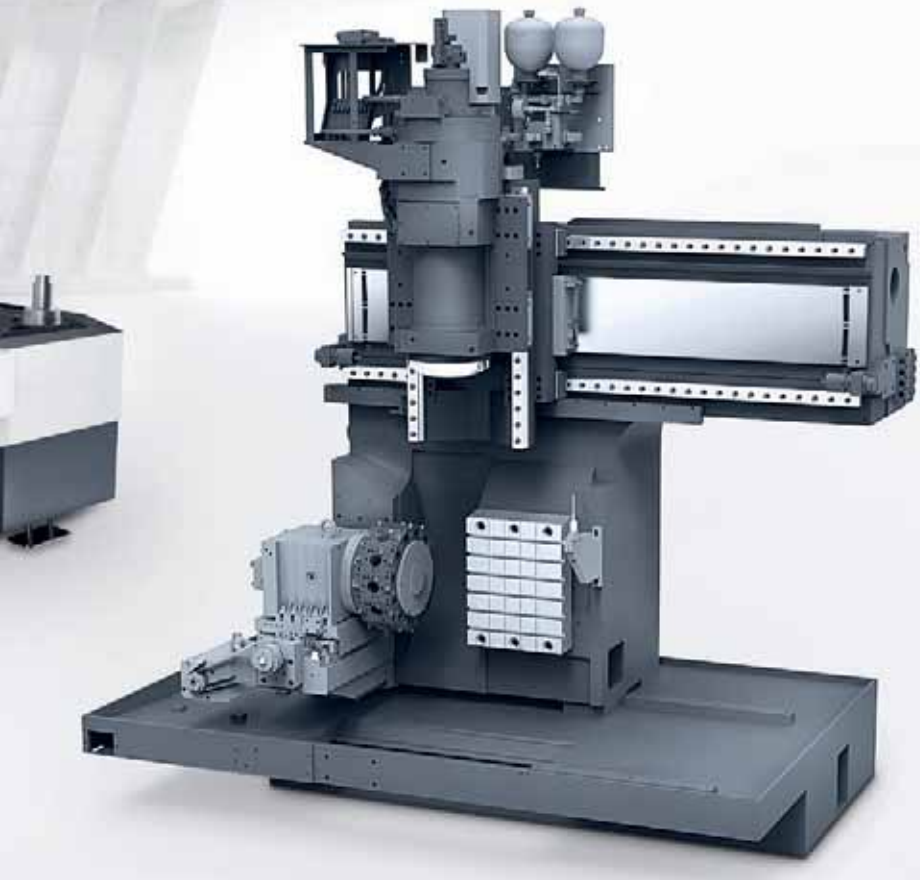

Highlights CTV 315 *linear*

+ **Highest stability** thanks to the knee design
  – Robust size 45 linear guides and ø 1.6 in. ball screws
  – Widely spaced linear guides
  18.3 in. on the X-axis
  14.7 in. on the Y-* and Z-axes
+ **Large spindle bearing** with ø 5.1 in. for maximum machining stability
+ **Optimized chip fall** thanks to free downward chip fall
+ **Maximum precision** thanks to direct measuring systems on the X- and Z-axes (Z-axis is optional)
+ **Thermal stability** thanks to the liquid-cooled main spindle

CTV 160 / 250 / 315 (*linear*) – integrated automation for maximized productivity.

+ Integrated trailing prism conveyor belt for up to 40 workpieces
  – no mechanical conversion necessary when changing workpieces, component sizes can easily be changed using the control
+ Use of optional inserts or pallets in the trailing frames
  – for position-oriented machining of workpieces
  – for asymmetrical and long, thin workpieces under < ø 1.2 in.
+ Capacity can be increased using smaller trailing frames on the existing conveyor belt
+ Trailing frame runs from rear to front through the machine, and if two machines are linked a chain runs from front to rear
+ Trailing prism conveyor as standard automation for the CTV 160 / 250 in STEALTH design

STEALTHDESIGN

The CTV 160 has a footprint of just 115.2 ft.² including chip conveyor and automation

Configuration and sizes

Trailing prism conveyor belt for the CTV 160 / 250 / 315 (*linear*)

	CTV 160 STEALTH*	**CTV 160 STEALTH** / (*linear*)****	**CTV 250 STEALTH** / (*linear*)****	**CTV 315 *linear*** **
ø 1.2 – 2.8 in.	36 Slots	40 Slots	40 Slots	–
ø 1.2 – 3.1 in.	–	–	–	52 Slots
ø 1.2 – 3.3 in.	27 Slots	30 Slots	30 Slots	–
ø 1.2 – 4.7 in.	24 Slots	24 Slots	24 Slots	–
ø 1.2 – 5.1 in.	–	–	–	26 Slots
ø 1.2 – 6.3 in.	18 Slots	20 Slots	20 Slots	–
ø 3.1 – 8.7 in.	–	–	16 Slots	–
ø 1.2 – 9.1 in. (with use up to ø 11.8 in.)	–	–	–	13 Slots
Workpiece height	6.3 (7.9) in.**	6.3 (7.9) in.**	6.3 (7.9) in.**	8.3 in.
Workpiece weight	max. 37.5 lbs. // max. 705.5 lbs.	max. 37.5 lbs. // max. 705.5 lbs.	max. 41.9 lbs. // max. 705.5 lbs.	max. 55.1 lbs.// max. 529.1 lbs.

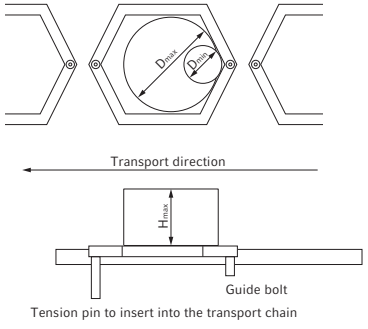

Tension pin to insert into the transport chain

Disc-type magazine (only for the CTV 160 / 250 (*linear*) with Y-axis) CTV 160 (*linear*): 20 Slots, ø 6.3 × 8.3 in., max. 17.6 lbs. // CTV 250 (*linear*): 16 Slots, ø 7.9 × 8.3 in., max. 44.1 lbs. // * Trailing prism conveyor belt with expansion possibility for optional feed / removal of workpieces up to ø 3.9 in., or a workpiece slide // ** Optional

Trailing prism conveyor belt for
the CTV 160 / 250 / 315 (*linear*)

In-process workpiece measuring

+ Position of the measuring probe outside of the work area – no contamination
+ Measurement of the workpiece in its clamped state
+ Results are automatically used to correct tool offsets
+ < 0.00008 in. repeatability
+ Can be used for radial positioning

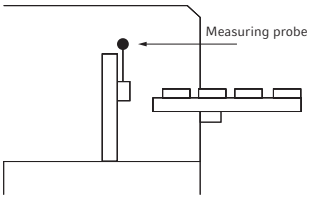

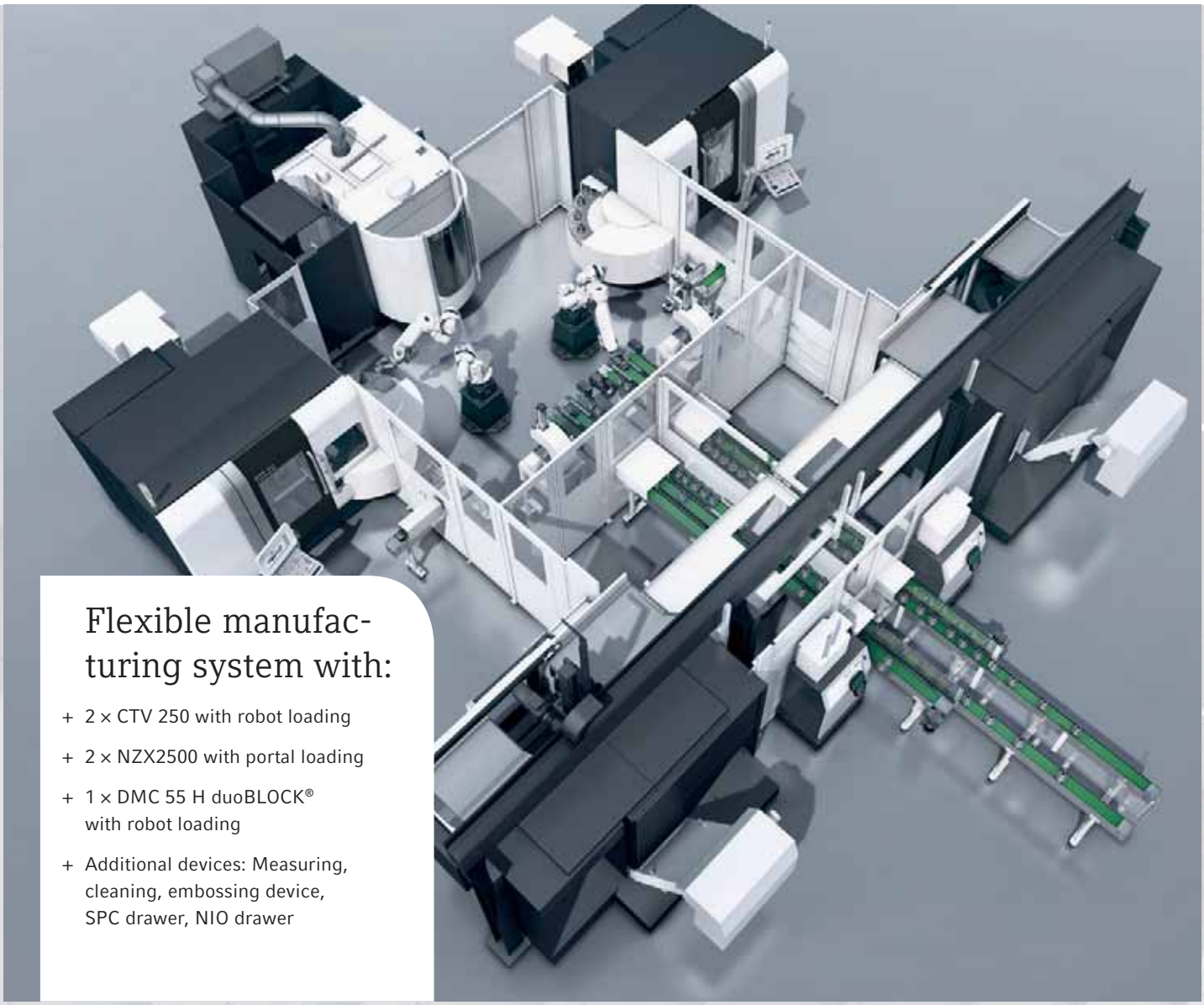

Flexible manufacturing system with:

+ 2 × CTV 250 with robot loading
+ 2 × NZX2500 with portal loading
+ 1 × DMC 55 H duoBLOCK® with robot loading
+ Additional devices: Measuring, cleaning, embossing device, SPC drawer, NIO drawer

1

2

1: WH 10 robot cell for automatic loading and unloading of a workpiece conveyor belt
2: Workpiece turning station for 6-sided complete machining

CTV – turnkey solutions, from automation to a complete production line.

	CTV 160 / 250	CTV 160 / 250 *(linear)*	CTV 315 *linear*	CTV 250 DF
Trailing prism conveyor belt	standard	•	•	–
Disc-type magazine	•	•	•	–
Pallet conveyor	•	•	•	–
Steel link chain	•	•	•	•
Shuttle	•	•	–	•
DMG MORI Automation				
WH 2	•	•	•	–
WH 3 / WH 3 U	•	•	•	–
WH 10	•	•	•	•
Linking				
Integrated turning station	•	•	•	•
Articulated robot arm	•	•	•	•
Complete manufacturing cells	•	•	•	•
Expansion levels / periphery				
Washing	•	•	•	•
Deburring	•	•	•	•
Measuring	•	•	•	•
Workpiece labels	•	•	•	•

• Optional, – not available

Linking of two CTV 160 / 250 (*linear*) machines by means of a disc-type magazine with integrated turning station

Manufacturing cell consisting of 2 × CTV 250 DF and one 6-axis robot for the fully automated production of CV joint components

Maximum stability for continually high cutting performance using large, widely spaced spindle bearings.

	CTV 160 (*linear*)	CTV 250 (DF / *linear*)	CTV 315 *linear*
Spacing of bearings (front – back)	11.8 in.	11.8 in.	13.5 in.
2 bearings (front)			
Bearing type	Angular ball bearing	Angular ball bearing	Angular ball bearing
Outer diameter	ø 5.9 in.	ø 7.1 in.	ø 7.9 in.
Inner diameter	ø 3.9 in.	ø 4.7 in.	ø 5.1 in.
2 bearings (rear)			
Bearing type	Angular ball bearing	Angular ball bearing	Angular ball bearing
Outer diameter	ø 5.5 in.	ø 6.5 in.	ø 7.1 in.
Inner diameter	ø 3.9 in.	ø 4.7 in.	ø 5.1 in.

Liquid-cooled main spindles for maximum temperature stability.

+ Bearing with four spindle bearings as an angular ball bearing for 30% higher rigidity per 0.4 in. bearing diameter – Bearing diameter up to ø 5.1 in.
+ Widely spaced bearings between 11.8 – 12.6 in. (3 × D) for maximum stability and 112.4 lbf. stiffness – radial and axial
+ Highest precision with < 0.0002 in. angular misalignment (concentricity and cylindricity)

		CTV 160 (*linear*)	CTV 250 (DF / *linear*)	CTV 315 *linear*
Rotational speed	rpm.	6,000	5,000	5,000
Power (40 / 100% DC)	hp.	28.2 / 21.5	42.9 / 33.5	42.9 / 33.5
Torque (40 / 100% DC)	ft./lbs.	129.8 / 99.6	265.5 / 191.8	265.5 / 206.5
Spindle flange		140h5	170h5	170h5

CTV 160 (*linear*)

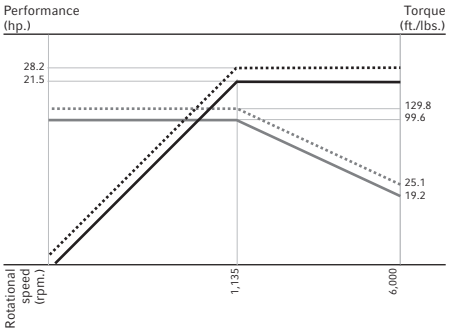

CTV 250 (DF / *linear*)

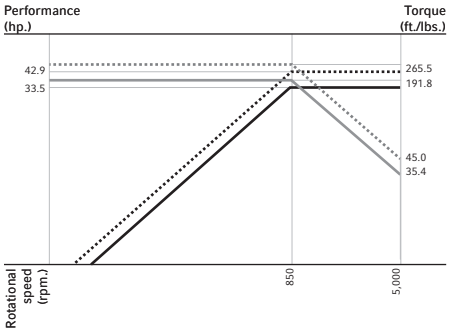

CTV 315 *linear*

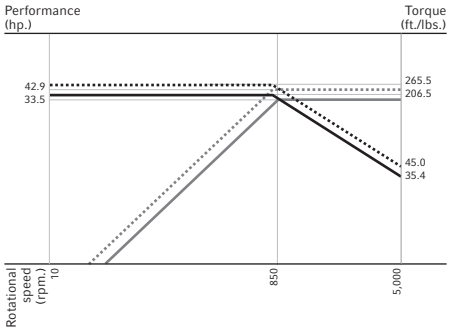

CTV 160 (*linear*) // 28.2 hp., 129.8 ft./lbs., 6,000 rpm.

High-performance roughing (CK45 // 3.9 in. component diameter)	
Material removal rate	**20.5 in.³/min**
Cutting depth	0.2 in.
Cutting speed	9,448.8 ipm.
Feed	0.01 in./rev.
High-performance boring (CK45)	
Tool diameter	1.1 in.
Spindle speed	909 rpm.
Cutting speed	3,149.6 ipm.
Feed	0.006 in./rev.

CTV 250 / 315 (*linear*) // 42.9 hp., 265.5 ft./lbs., 5,000 rpm.

High-performance roughing (CK45 // 6.7 in. component diameter)	
Material removal rate	**25.6 in.³/min**
Cutting depth	0.2 in.
Cutting speed	9,448.8 ipm.
Feed	0.01 in./rev.
High-performance boring* (CK45)	
Tool diameter	1.1 in.
Spindle speed	909 rpm.
Cutting speed	3,149.6 ipm.
Feed	0.006 in./rev.

* limited by 1348.9 lbf. feed force of the Z-axis // values for the CTV 315 *linear* are available on request

Applications and parts
Machine and technology
› Tools
Control technology
Technical data

1

2

3

4

Short chip-to-chip times thanks to the servo turret with an indexing time of 0.25 second.

+ Short non-productive times thanks to electric turret switching 90° in just 0.25 seconds
+ Highest stability during machining thanks to three-part Hirth serration with hydraulic interlocking
+ Use of longer tools on the turret due to the space-saving design:
  8.5 in. = VDI 30 (CTV 160 (*linear*)
  7.5 in. = VDI 40 (CTV 250 (*linear*)
  9.1 in. = VDI 40 (CTV 315 *linear*, 8.7 in. with Direct Drive* turret)
  7.9 in. = VDI 50* (CTV 315 *linear*)

*Optional

1: Work area of a CTV 160 *linear* with multi-function plate and two additional tools
2: Multi-function plate of a CTV 160 or 250 (*linear*) for two additional tools
3: Heavy-duty tool on the multi-function plate of a CTV 315 *linear*
4: Driven 4x tool on the multi-function plate of a CTV 315 *linear*
5: Two driven tools on the multi-function plate of a CTV 315 *linear* including stainless steel cover

Multi-function plate* for additional tools

+ CTV 160 / 250 (*linear*)
  Multi-function plate (5.5 × 15.4 in.) for two additional tools
  (CTV 160: VDI 30 // CTV 250: VDI 40)
  – Optional steel tool holder for external machining (top)
  – Optional steel tool holder for internal machining (bottom)
  – Optional internal coolant supply for both tools
+ CTV 315 *linear*
  Multi-function plate (15.4 × 17.5 in.) for additional VDI 40 heavy-duty tools
+ CTV 315 *linear*
  Integration of driven tools or an HSK-A63 milling spindle with 12,000 rpm., 29.5 hp. and 73.8 ft./lbs.

DIRECT Drive

Direct Drive turret with 10,000 rpm. for increased productivity thanks to highest material removal rates.

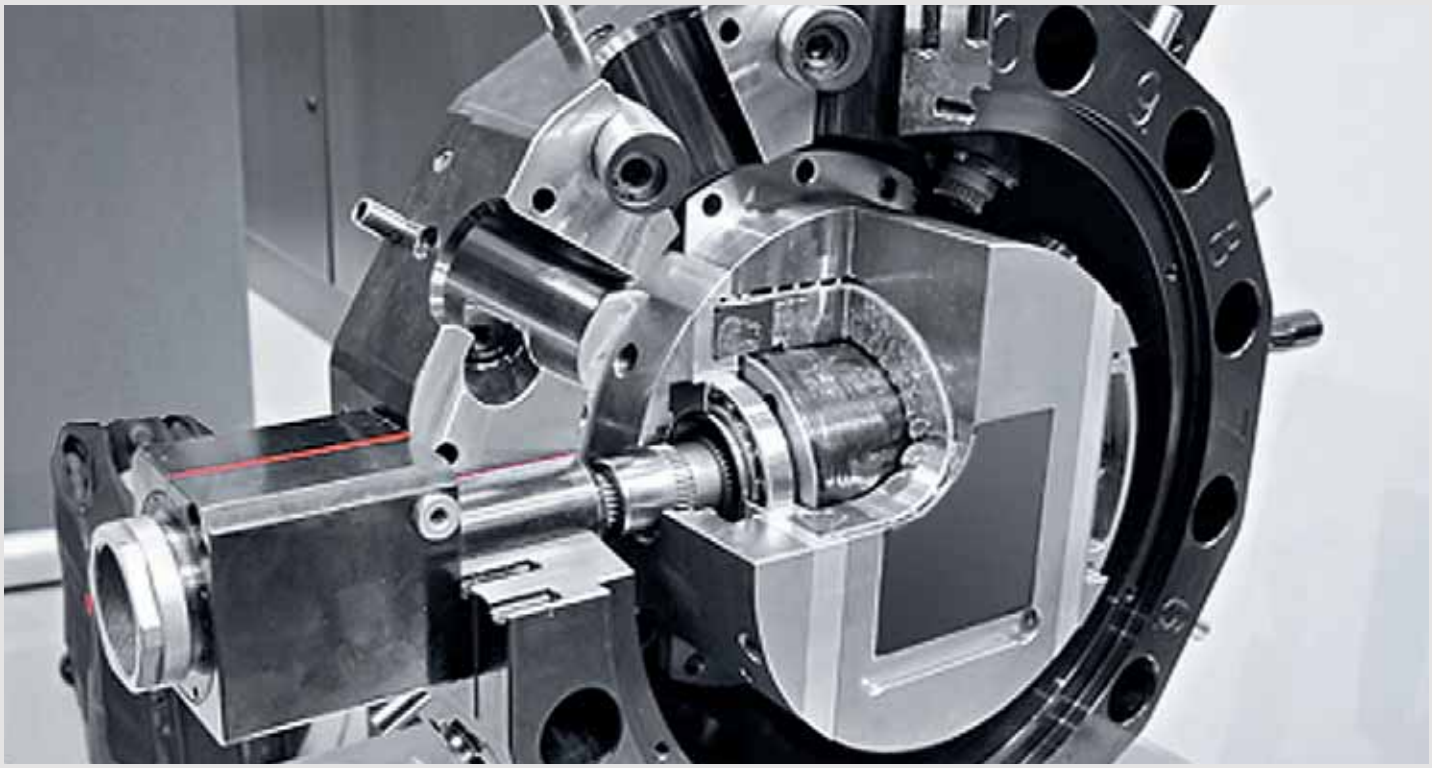

Highlights

+ **Low-wear Direct Drive** with low heat generation thanks to the elimination of the transmission
+ Runs more quietly thanks to the gear-free drive and maximizes tool life
+ **Higher speed, performance and torque** than conventional drives, optionally available as a star turret for the following machines:
  CTV 315 *linear*:
  VDI 40, 10,000 rpm., 19.0 hp. and 25.1 ft./lbs.
+ **TRIFIX® precision interface** with a tool setup time of less than 30 seconds as standard
+ **Torque of up to 118.0 ft./lbs.** thanks to the 4:1 gear ratio

TRIFIX

TRIFIX® – fast and precise tooling with VDI compatibility.

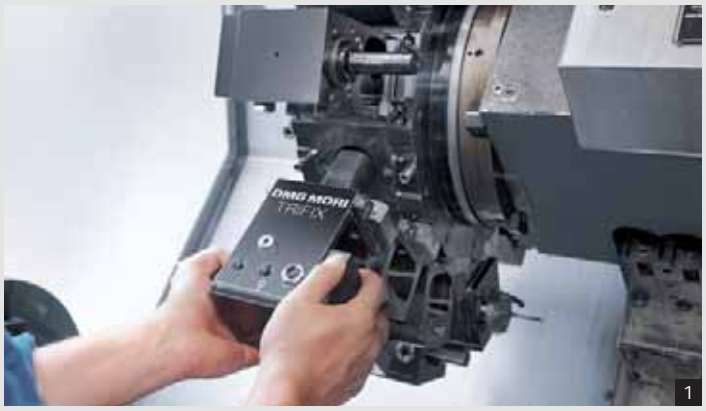

1

2

3

1+2: Tools with TRIFIX® holders for the highest stability and 0.0002 in. repeatability
3: 12-station turret with TRIFIX® holder for < 0.0004 in. positioning accuracy
4: Direct Drive turret with TRIFIX® holder and speeds of 10,000 rpm.

Highlights
TRIFIX® precision interface

+ **Available for the Direct Drive turret**
+ **Tool set-up time of less than 30 seconds thanks to VDI with TRIFIX®**
+ **Maximum stability and long-term accuracy:** backlash-free and flexible double alignment and increased stability thanks to increased planar support with a hole pattern
+ **< 0.0002 in. repeatability** (same tool, same position)
+ **< 0.0004 in. positioning accuracy from one station to another**
+ Fully aligned driven tools
+ Standard VDI holders can be used

CTV 160 (*linear*)

VDI 30 standard turret
4,000 rpm., 7.2 hp., 13.3 ft./lbs.

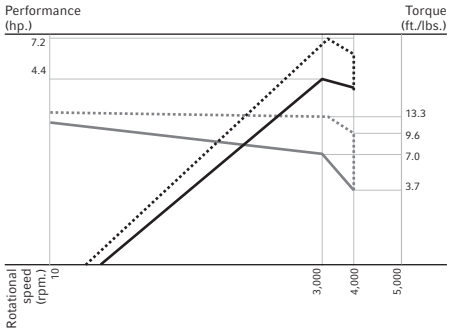

CTV 250 / 315 (*linear*)

VDI 40 standard turret
4,000 rpm., 15.7 hp., 20.7 ft./lbs.

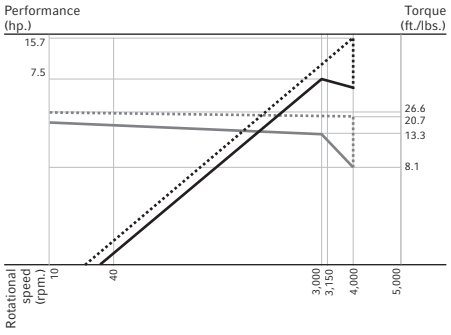

CTV 315 *linear*

Direct Drive VDI 40 turret optionally available
10,000 rpm., 19.0 hp., 25.1 ft./lbs.

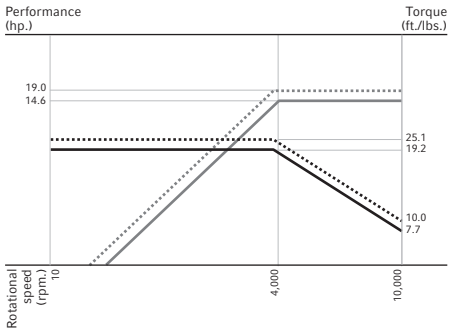

CTV 315 *linear*

VDI 50 turret optionally available
4,000 rpm., 15.2 hp., 29.5 ft./lbs.

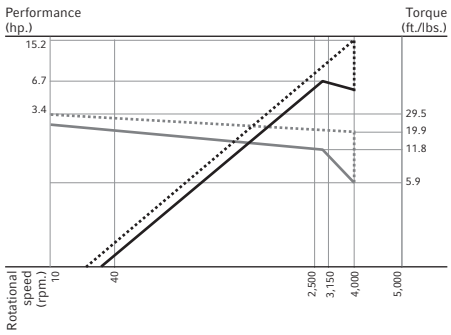

Driven tools up to 10,000 rpm., 18.8 hp. and 25.1 ft./lbs. for highest milling performance.

		CTV 160 (*linear*)	CTV 250 / 315 (*linear*)	CTV 315* *linear*	CTV 315* *linear*
Turret size		VDI 30	VDI 40	VDI 40	VDI 50
Number of stations		12	12	12	12
Number of driven tools*		12	12	12	12
Speed of driven tools	rpm.	4,000	4,000	10,000	4,000
Power (40 / 100% DC)	hp.	7.2 / 4.4	15.7 / 7.5	19.0 / 14.6	15.2 / 6.7
Torque (40 / 100% DC)	ft./lbs.	13.3 / 9.6	20.7 / 13.3	25.1 / 19.2	29.5 / 19.9
Turret width across flats	in.	10.6	12.6	13.4	15.0

		CTV 160 (*linear*)	CTV 250 / 315 (*linear*) VDI 40	CTV 315* *linear* VDI 50
		5,000 rpm., 7.2 hp., 13.3 ft./lbs.	4,000 rpm., 15.7 hp., 20.7 ft./lbs.	4,000 rpm., 15.2 hp., 19.9 ft./lbs.
Performance milling CK45		1:1 tool drive	1:1 tool drive	1:1 tool drive
Material removal rate	$in.^3$/min	3.7	8.0	8.0
Spindle speed	rpm.	2,546	1,401	1,401
Power	hp.	6.6	5.6	5.6
Torque	ft./lbs.	13.3	20.7	20.7
Feed	in./tooth.	0.004	0.01	0.01
Cutting depth / width	in.	0.2 / 0.8	0.06 / 2.0	0.06 / 2.0
Cutting speed	ipm.	6,299.2	8,661.4	8,661.4
Number of teeth		3	5	5
Mill diameter	in.	0.8	2.0	2.0
Specific cutting force	$lbf./in.^2$	277,022	277,022	277,022
Tapping CK45				
Thread size	in.	M20 × 0.04	M16 × 0.06	M16 × 0.06
Spindle speed	rpm.	318	397	397

DIRECT Drive		Direct Drive	CTV 315* *linear* VDI 40
			10,000 rpm., 19.0 hp., 25.1 ft./lbs.
Performance milling CK45		1:1 tool drive	4:1 tool drive
Material removal rate	$in.^3$/min	10.5	23.5
Spindle speed	rpm.	4,775	5,602:4
Power	hp.	3.2	6.3
Torque	ft./lbs.	3.7	24.3
Feed	in./tooth	0.03	0.01
Cutting depth / width	in.	0.05 / 0.8	0.2 / 2.0
Cutting speed	ipm.	11,811.0	8,661.4
Number of teeth		2	4
Mill diameter	in.	0.8	2.0
Specific cutting force	$lbf./in.^2$	277,022	277,022
Tapping CK45			
Thread size	in.	M20 × 0.06	M20 × 0.06
Spindle speed	rpm.	318	318

* Optional

Toothed gear // CTV 160

Sector	Automotive	Machining time	32 sec.
Material	20MnCr5	Highlight	Hard turning
Workpiece dimensions	ø 3.9 × 1.2 in.		

Impeller (contour) // CTV 160

Sector	Automotive	Machining time	24 sec.
Material	Aluminum	Highlight	Special clamping device
Workpiece dimensions	ø 2.0 × 1.2 in.		

Guide bush // CTV 160

Sector	Machine construction	Machining time	48 sec.
Material	16MnCr5	Highlight	Hard turning
Workpiece dimensions	ø 2.4 × 4.3 in.		

Drive element // CTV 160

Sector	Automotive	Machining time	42 sec.
Material	30MnVS6	Highlight	Tool shank loose turning
Workpiece dimensions	ø 2.8 × 7.9 in.		

Spur gear (pre-turning) // CTV 250

Sector	Automotive	Machining time	74 / 72 sec. (OP10 / OP20)
Material	16MnCr5		
Workpiece dimensions	ø 6.3 × 1.3 in.	Highlight	Large volume production

Bearing flange // CTV 250

Sector	Automotive	Machining time	50 / 36 sec. (OP10 / OP20)
Material	42CrMo4		
Workpiece dimensions	ø 4.7 × 1.3 in.	Highlight	Hard turning

Toothed gear // CTV 160 *linear*

Sector	Machine construction	Machining time	4:22 / 3:56 min. (OP10 / OP20)
Material	CK45		
Workpiece dimensions	ø 6.3 × 6.3 in.	Highlight	Machining with Y-axis

Transmitter wheel // CTV 160 *linear*

Sector	Machine construction	Machining time	128 sec.
Material	CK45	Highlight	High proportion of milling
Workpiece dimensions	ø 4.7 × 1.6 in.		

Connection flange // CTV 250 *linear*

Sector	Machine construction	Machining time	148 sec.
Material	42CrMo4	Highlight	Complete machining
Workpiece dimensions	ø 7.9 × 1.5 in.		

Connector // CTV 250 *linear*

Sector	Machine construction	Machining time	89 / 96 sec. (OP10 / OP20)
Material	C45		
Workpiece dimensions	ø 3.5 × 2.4 in.	Highlight	Machining with Y-axis

Housing // CTV 315 *linear*

Sector	Machine construction	Machining time	4:35 min.
Material	42CrMo4	Highlight	Heavy roughing
Workpiece dimensions	9.4 × 9.4 × 2.8 in.		

Roller // CTV 315 *linear*

Sector	Machine construction	Machining time	3:25 / 3:17 min (OP10 / OP20)
Material	C45		
Workpiece dimensions	ø 10.2 × 4.7 in.	Highlight	Heavy roughing

CTV Series

CTV 250 DF – the vertical turning and milling center for machining CV joints.

Highlights CTV 250 DF

+ Highest dynamics thanks to the drive of the turn-mill swiveling tool carrier (DF) as Direct Drive with 90 rpm., swivel range +105 / –45°
+ Turn-mill swiveling tool carrier for up to two HSK-C63-F80 milling spindles, 6,000 rpm., 19.4 hp. and 33.9 ft./lbs. (one milling spindle as standard)
+ Additional Capto C5 holder for multiple tools with up to four cutting edges
+ Highest durability thanks to stainless steel covers in the work area
+ Machine-integrated automation in form of a metal link conveyor for feeding and removing workpieces
+ Machine configuration with automation on the right or left hand side

Machining an inner race

CTV 250 DF – parts overview for CV joints.

AC inner race	
Material	20MnCr5
Workpiece dimensions	0.7 in. ball diameter
Machining time	33 sec.

AC ball cage	
Material	16MnCr5
Workpiece dimensions	0.6 in. ball diameter
Machining time	60 sec.

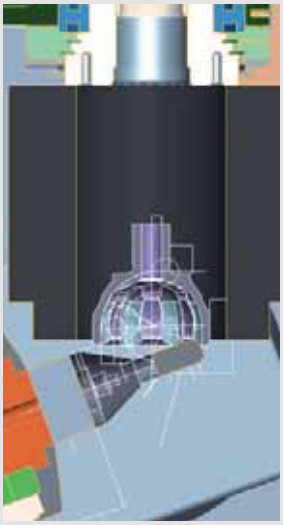

VL housing	
Material	CF53
Workpiece dimensions	0.7 in. ball diameter
Machining time	30 sec.

VL housing (section)	
Material	CF53
Workpiece dimensions	0.9 in. ball diameter
Machining time	27 sec.

Applications

Fixed joints (inner/outer races)	Sliding joints / axis drive joints (inner/outer races)
UF	VL
RF	DO
AC	

1: Machine with automation in form of a metal link conveyor for feeding and removing workpieces
2: Workpiece gripper for automatically loading and unloading the moveable workpiece shuttle
3: Loading and unloading the workpiece shuttle using the Z travel of the main spindle

Highlights of the turn-mill swiveling tool carrier

1 Turn-mill swiveling tool carrier with Direct Drive
Swivel range of +105 / –45°, Direct Drive with 90 rpm. and low mass moment of inertia thanks to its low height of just 12.4 in. resulting in 0.4 second swivel time (180°)

2 Multiple disc brake
Higher durability as standard

3 Swiveling tool carrier with 1 or 2 milling spindles
(HSK-C63-F80) max. 6,000 rpm., 19.4 hp., 33.9 ft./lbs., highest tool rigidity for maximized durability thanks to the ø 3.1 in. ball bearing and ø 3.1 in. tool contact surface

4 Capto C5 holder for multiple tools
(up to 4 cutting edges)

DMG MORI SLIM*line*® or DMG MORI ERGO*line*® panel.

1: 60% reduction in programming time thanks to innovative multi-channel programming

Highlights of ShopTurn 3G (optional)

+ 3D graphics including real-time simulation
+ Absolute flexibility between DIN and WOP thanks to the combination of ShopTurn cycles with DIN
+ Quick, easy and clearly structured tool management
+ Full ShopMill functionality
+ User diagrams for quick set-up
+ Available for all machines with DMG MORI ERGO*line*® control

CTV 160 / 250 / 315 in STEALTH design

+ Swivel-mounted and integrated DMG MORI SLIM*line*® control with **15" display** and SIEMENS 840D solutionline
+ Ethernet and USB interface for rapid data transfer
+ Optional TRANSLINE

CTV 160 / 250 (DF / *linear*)

+ DMG MORI ERGO*line*® control with **19" display** and SIEMENS 840D solutionline
+ Ethernet and USB interface for rapid data transfer

1: Clear depiction of the block structure thanks to alignment based on synchronous points; color display of productive and non-productive time as well as spindle utilization
2: Tool management: efficient tool data management including all details, such as sister tools and tool life

3: Cycle display with animated elements: graphically simulated work process with animated elements in the user interface for a clear display
4: Combination of DIN and ShopTurn programming: the blocks can comprise technical program sections consisting of DIN code, programGUIDE and ShopTurn / ShopMill task elements

5: 3D simulation: visual multi-channel machining thanks to 3D displays, detailed images and workpiece section
6: Copy & paste: by copying, cutting and pasting in blocks, it is possible to optimize even complex programs in two channels at once

Up to 50% increase in productivity with exclusive DMG MORI technology cycles.

Technology cycle highlights

+ Exclusive context menus with parameters
+ Easy, dialog-based input of parameters
+ Easy to learn thanks to predefined input screens – almost no programming knowledge required
+ No complicated DIN programming
+ Available for all machines with DMG MORI SLIM*line*® and DMG MORI ERGO*line*® controls

Easy tool monitoring

+ Driven tool load monitoring during the machining process in order to avoid damage to the machine and equipment

Eccentric turning and milling

+ Machining of cylindrical elements of a workpiece, even if the whose center point is not located in the center of the machine spindle

Alternative speeds – for vibration-sensitive clamping operations

+ Modification of the spindle speed in order to avoid vibrations during the machining process

Multi-thread cycle

+ This cycle provides an interface for entering the inclination, number of threads and contour of the thread

Program mode control

+ Display of the workpiece number and data
+ Facilitates resuming work after the program is interrupted

Retraction cycle

+ Emergency function to retract the X- and Z-axes at the push of a button
+ Operation using SOFT*key*®

CTV Series

Save up to 30% energy – energy efficiency measures with DMG MORI machines.

Efficient – optimized design

+ Optimal drive design
+ Regenerative drives
+ Controlled aggregates*
+ Minimized friction

Efficient – intelligent control system

+ Process optimization
+ DMG Virtual Machine*
+ DMG AUTO*shutdown*

* Optional

Energy Saving

Smart, standard technology already saves up to 20% of energy costs , over the entire life cycle of your DMG MORI machine tool.

DMG AUTO*shutdown*:
Intelligent standby control to avoid unnecessary energy consumption when idle.

DMG Virtual Machine* – optimized design

Unique – your DMG MORI machine 1:1 on the PC

+ Efficient production start-up thanks to optimal preparation
+ Real-time cycle time calculation thanks to PLC integration
+ Full availability of all cycles and NC functions
+ Highest process safety thanks to collision detection and work area verification
+ Authentic machine model with exact work area display
+ Set-up and tooling time are cut by 80%

* Optional

1

2

3

4

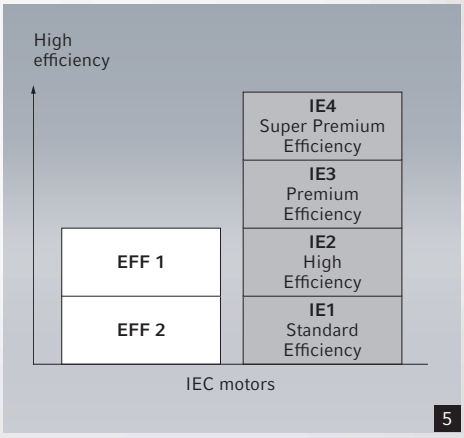

5

6

DMG MORI
ENERGY SAVING

1 Design

FEM-optimized design with high static and low moving masses

2 Linear guides

Lowest friction through consistent use of roller bearing technology

3 Servo technology / frequency control*

Frequency-controlled coolant and hydraulic pumps,
instead of constant pumps with throttle technology

4 Drives

Energy recovery during the braking phases of spindles and feed drives

5 Motor

Use of the latest drive motors with up to 93% efficiency

6 Cooling*

Inverter-controlled systems for demand-based cooling

* Optional

CTV 160 / 250

Work areas CTV 160 / 250 in STEALTH design.

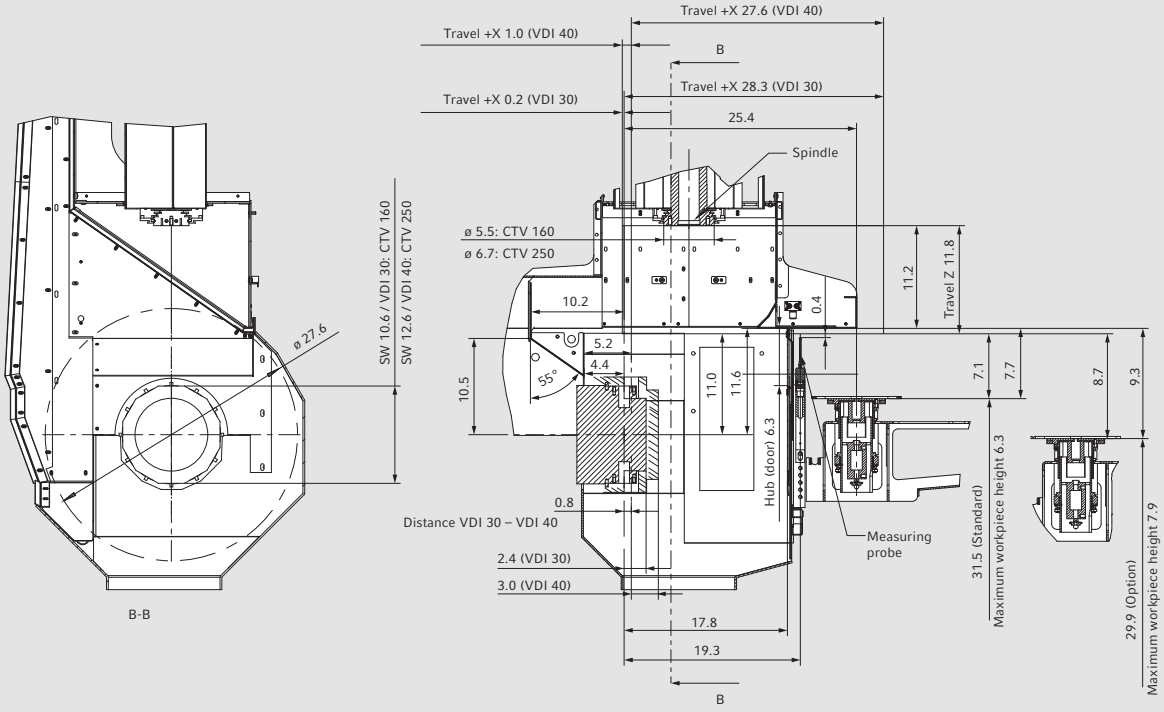

Floor plans

CTV 160 / 250 floor plan: Machine with a trailing prism conveyor belt to the left and chip conveyor to the rear

Front view

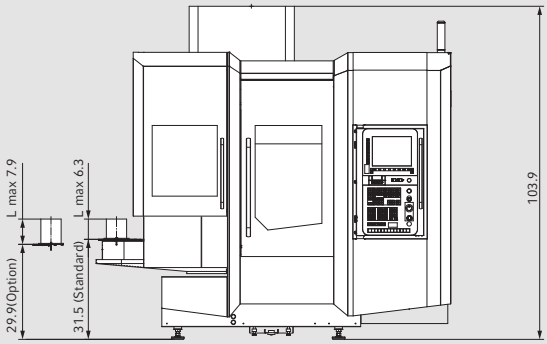

Top view

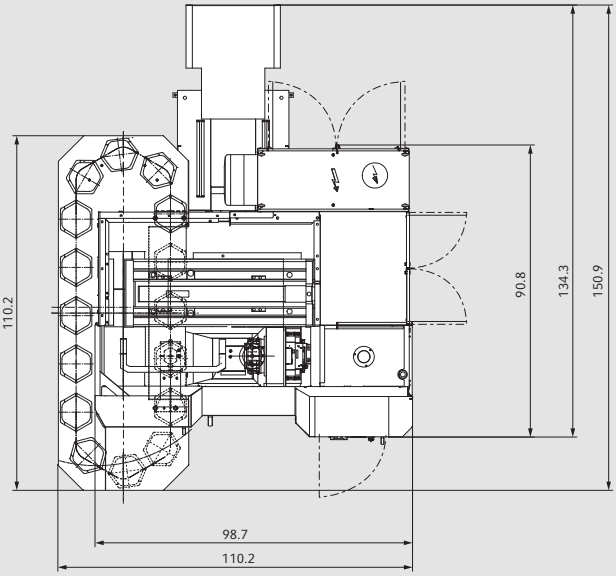

CTV 160 / 250 floor plan: Machine with a trailing prism conveyor belt to the right and chip conveyor to the rear

Front view

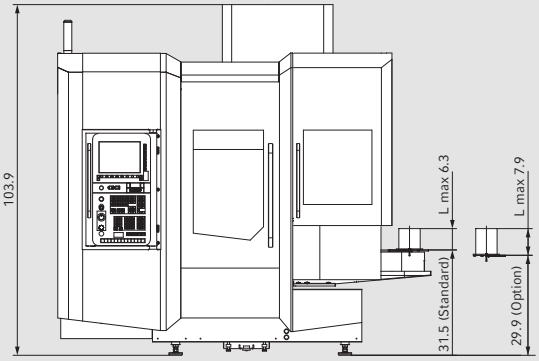

Top view

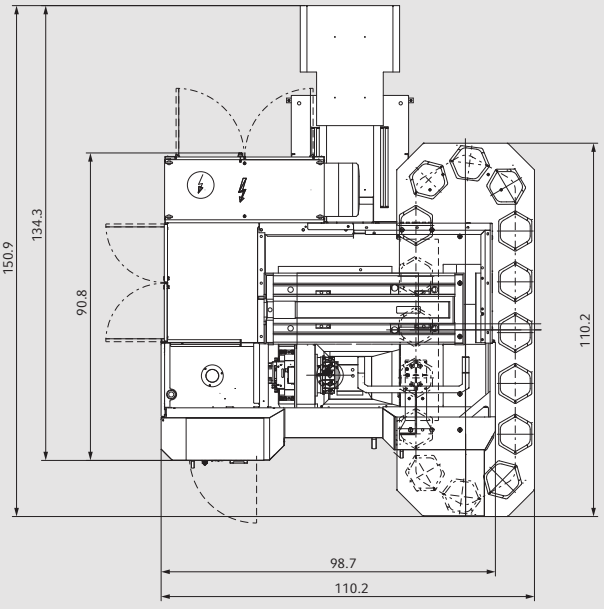

CTV 160 / 250 floor plan: Machine with a trailing prism conveyor belt to the left and chip conveyor to the right

Front view

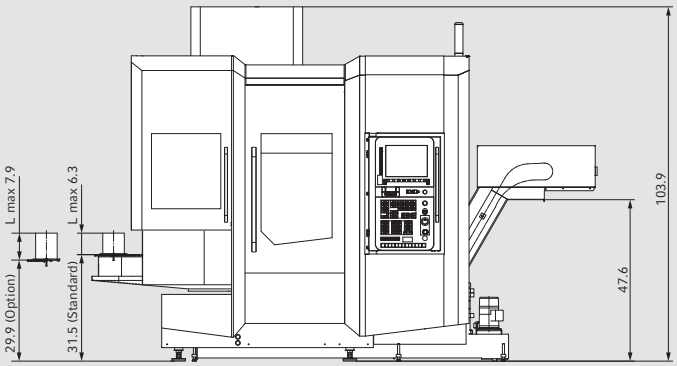

Top view

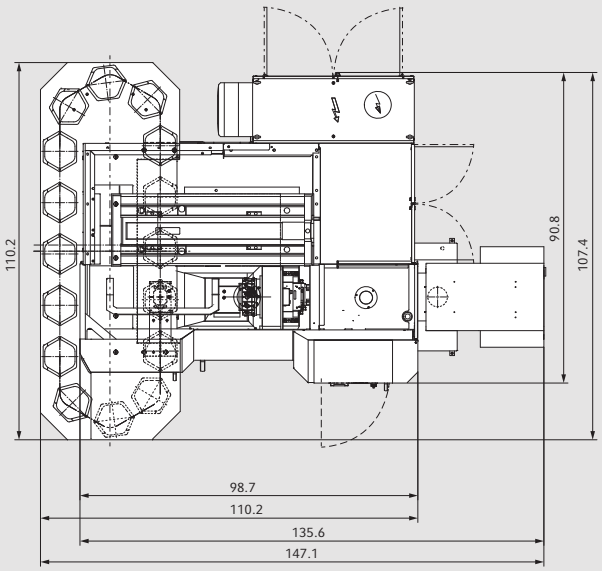

CTV 160 / 250 floor plan: Machine with a trailing prism conveyor belt to the right and chip conveyor to the left

Front view

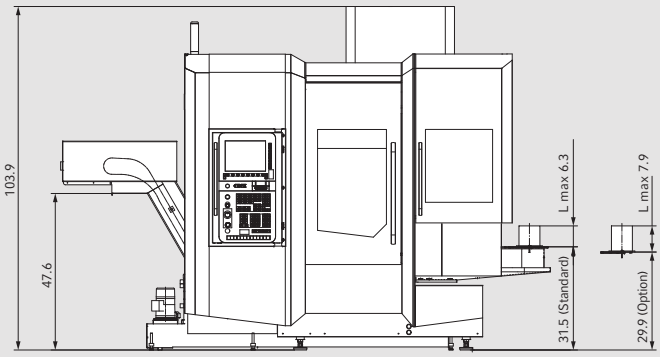

Top view

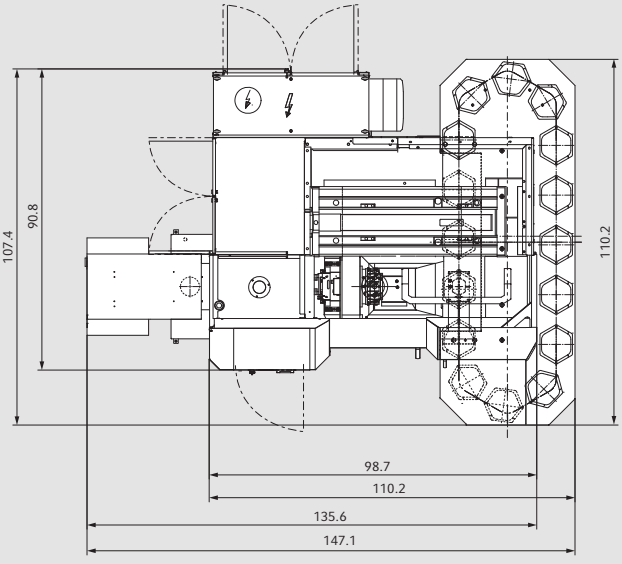

Measurements in inches

Work areas of the CTV 160 / 250 (*linear*)

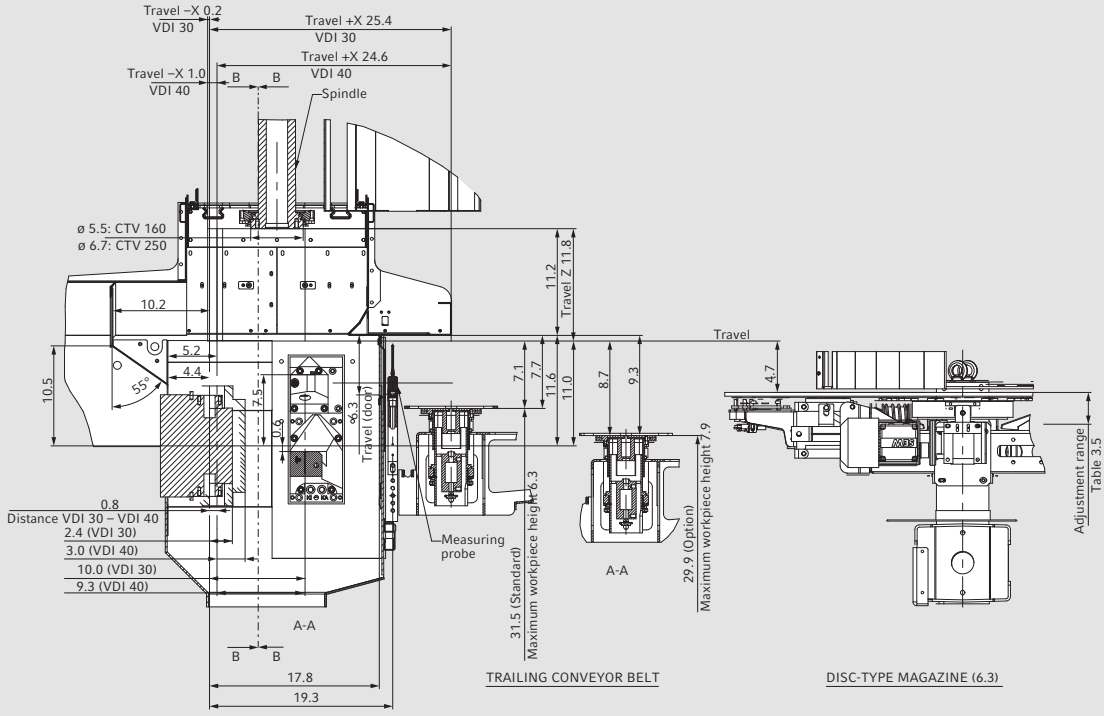

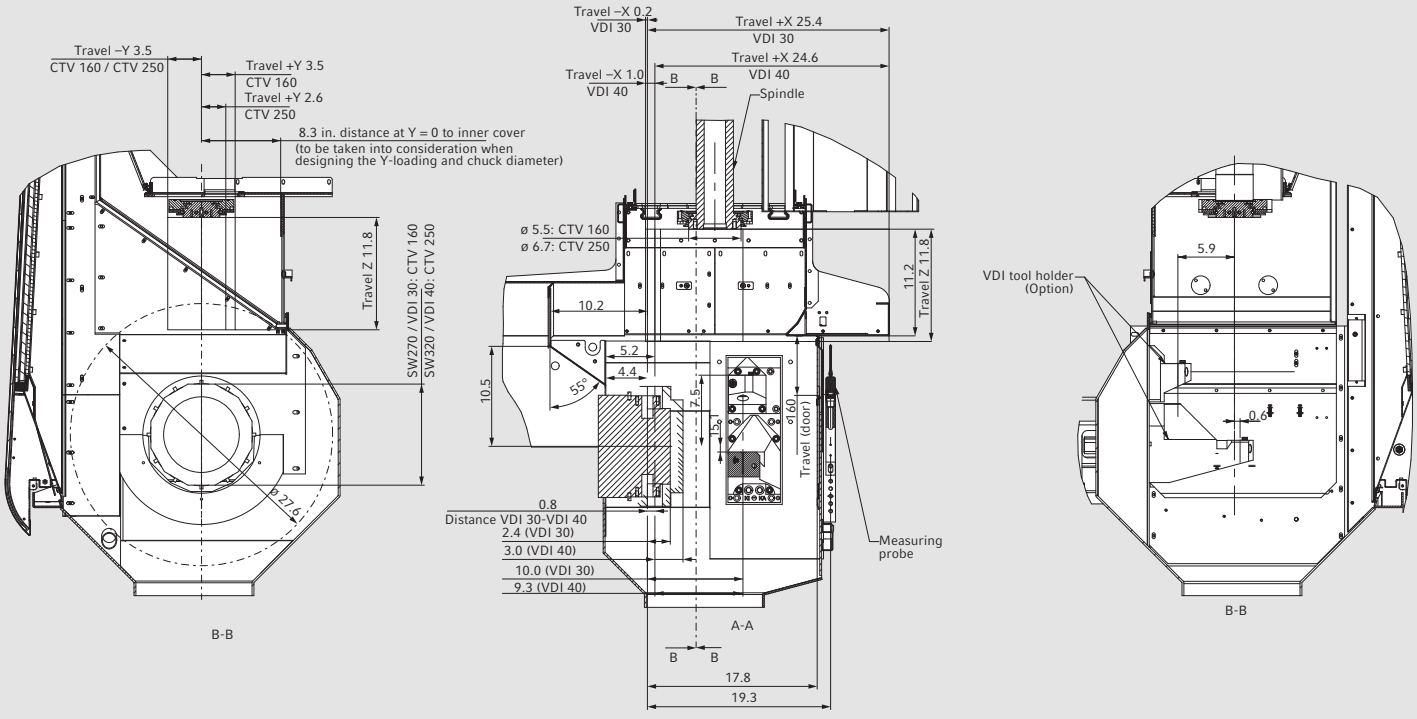

CTV 160 / 250 (*linear*)

Floor plans

CTV 160 / 250 (*linear*) floor plan: Machine with a trailing prism conveyor belt to the right and chip conveyor to the left (machines with automation mirrored left)

Front view

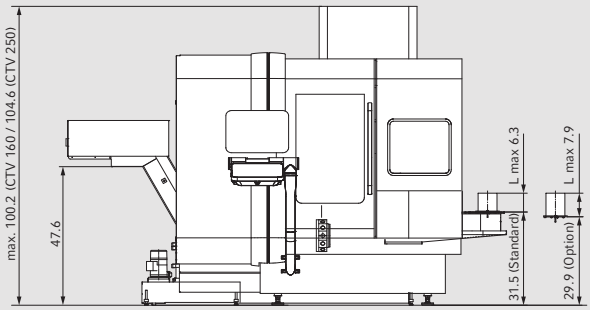

Top view

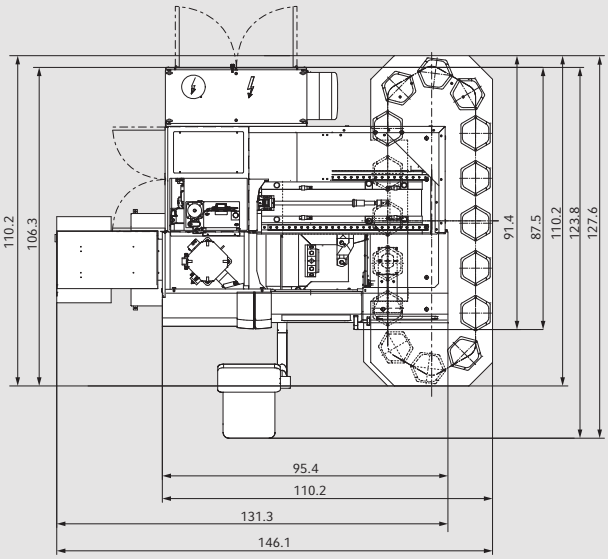

CTV 160 / 250 (*linear*) floor plan: Machine with a trailing prism conveyor belt to the right and chip conveyor to the rear (machines with automation mirrored left)

Front view

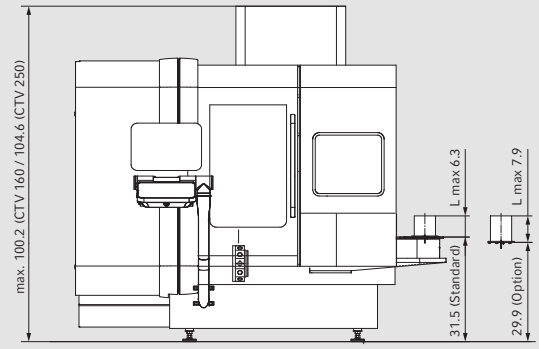

Top view

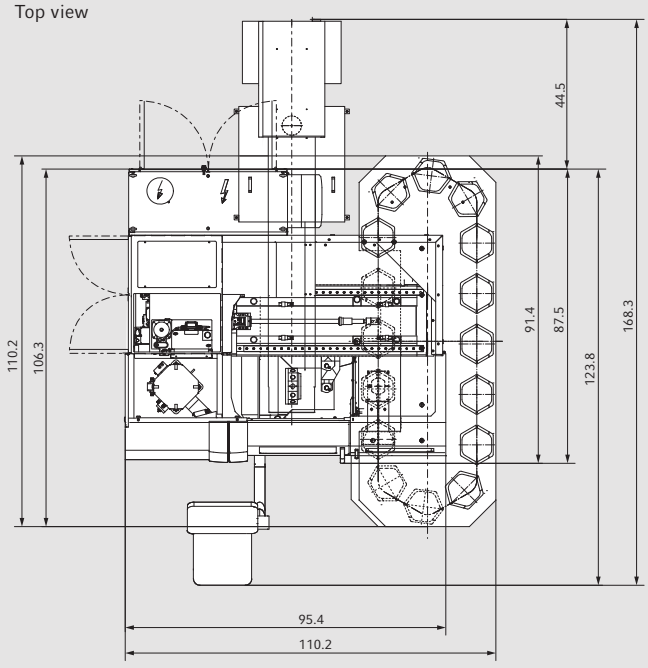

CTV 160 / 250 (*linear*) floor plan: Machine with a disc-type magazine to the right and chip conveyor to the left (machines with automation mirrored left)

Front view

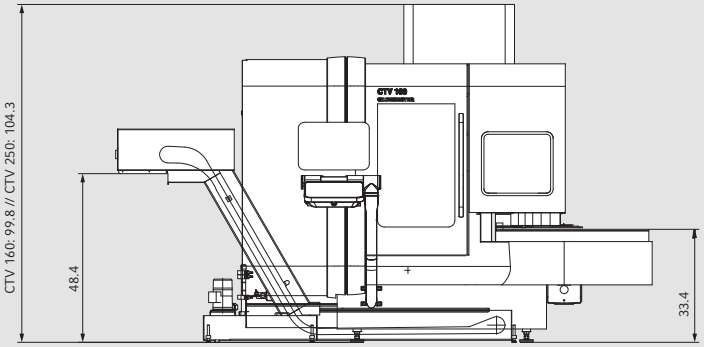

Top view

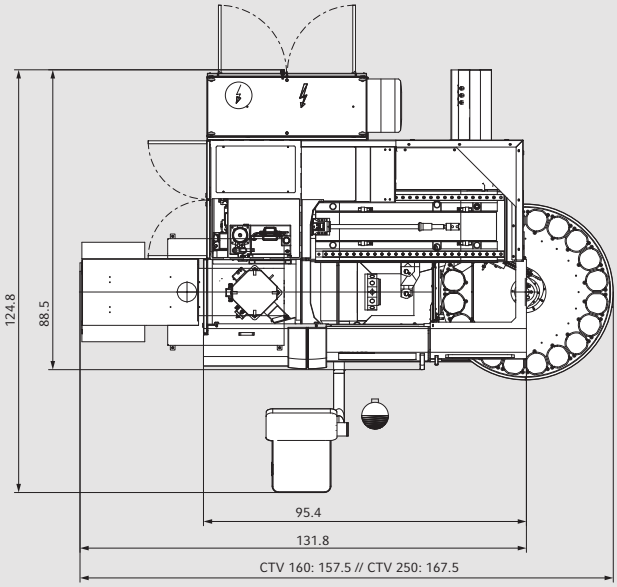

CTV 160 / 250 (*linear*) floor plan: Machine with a disc-type magazine to the right and chip conveyor to the rear (machines with automation mirred left)

Front view

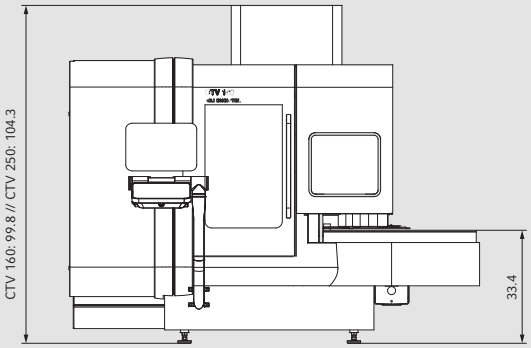

Top view

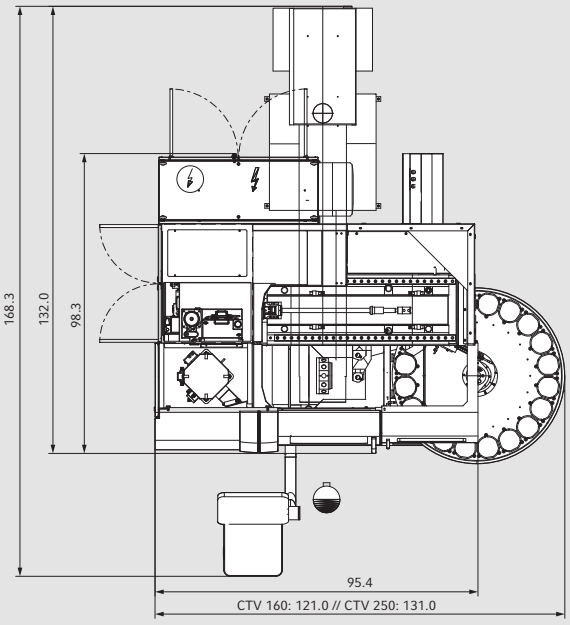

Measurements in inches

CTV 315 *linear*

Work areas of the CTV 315 *linear*

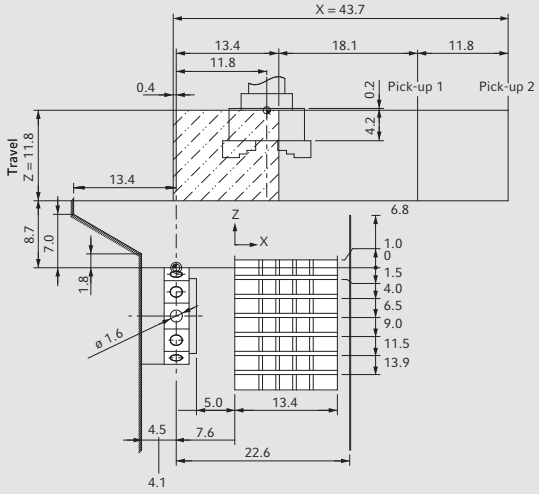

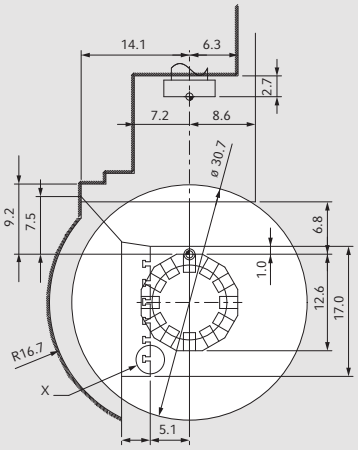

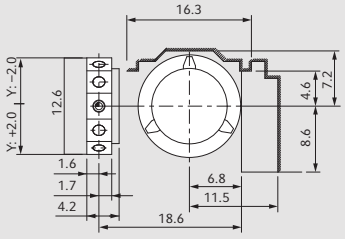

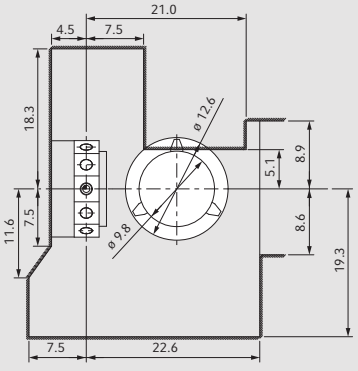

Floor plans

CTV 315 *linear* floor plan: Machine with a trailing prism conveyor belt to the right and chip conveyor to the left

Front view

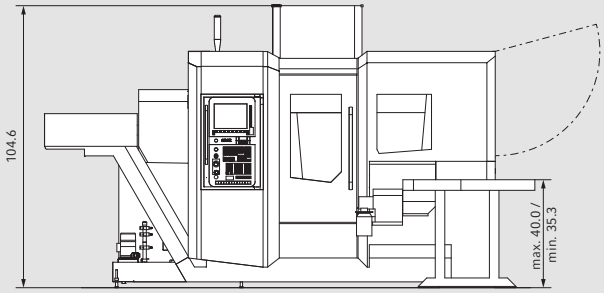

Top view

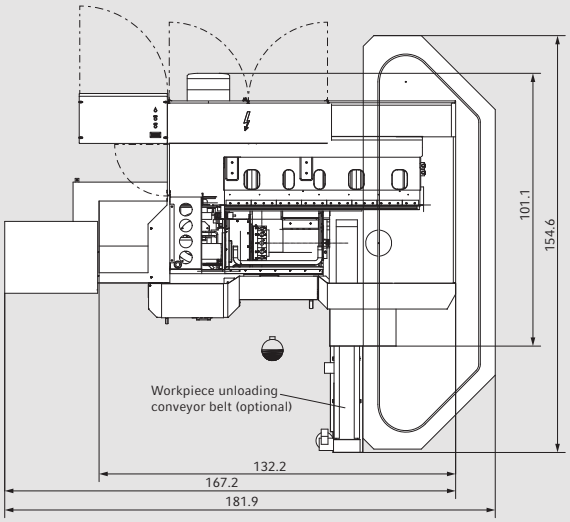

CTV 315 *linear* floor plan: Machine with a trailing prism conveyor belt to the left and chip conveyor to the right

Front view

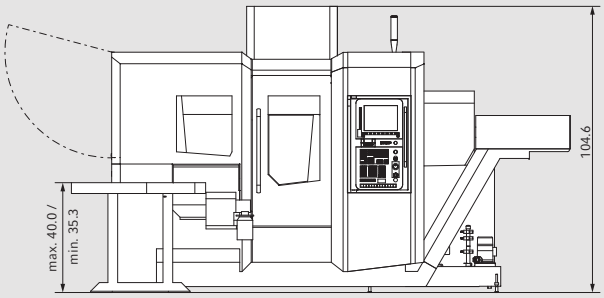

Top view

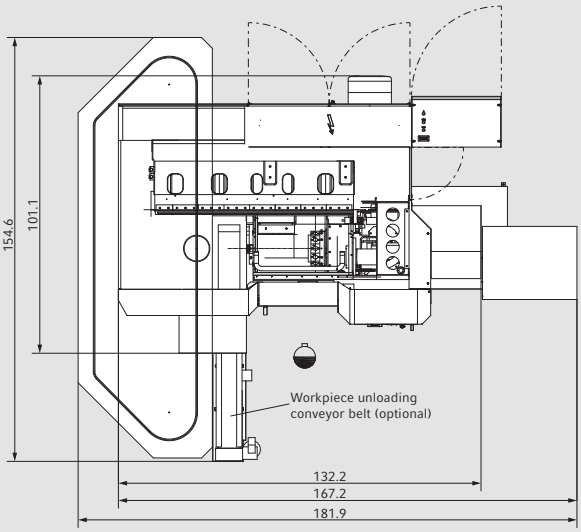

Measurements in inches

CTV 250 DF

Work areas* of the CTV 250 DF

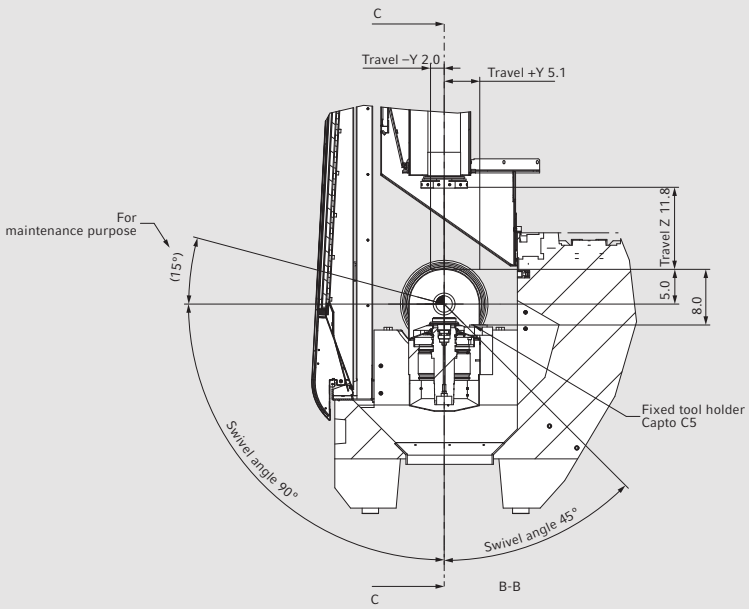

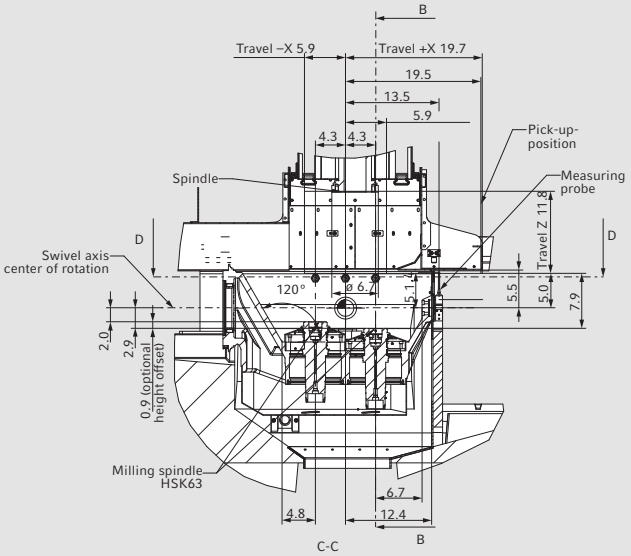

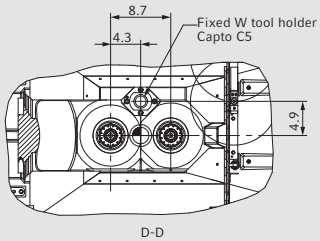

Machine zero point

* CTV 250 DF left-hand machine is reversed

Floor plans

CTV 250 DF floor plan: Machine with automation to the right

Front view

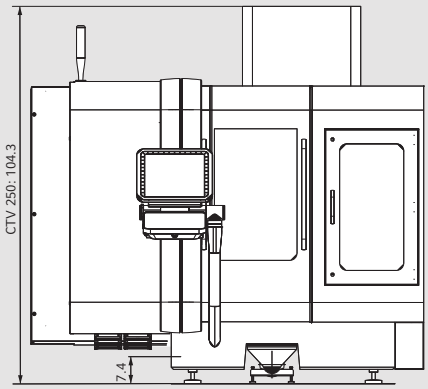

Top view

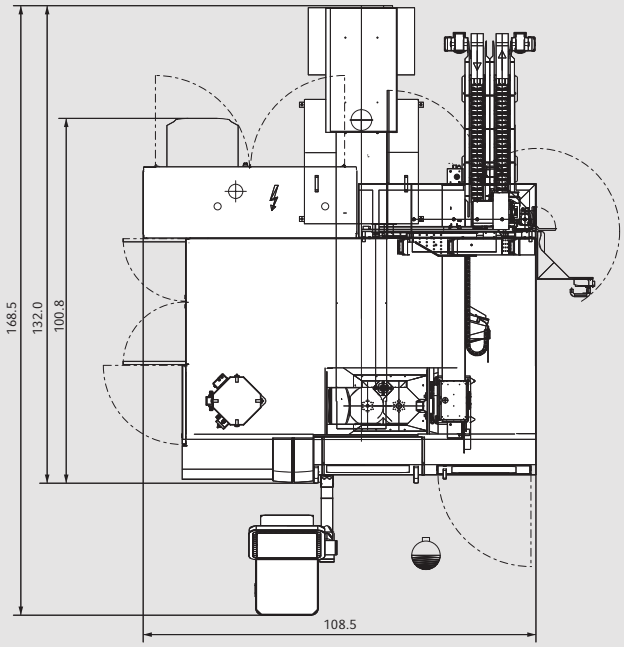

CTV 250 DF floor plan: Machine with automation to the left

Front view

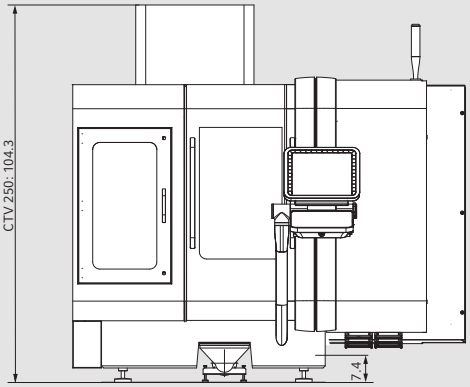

Top view

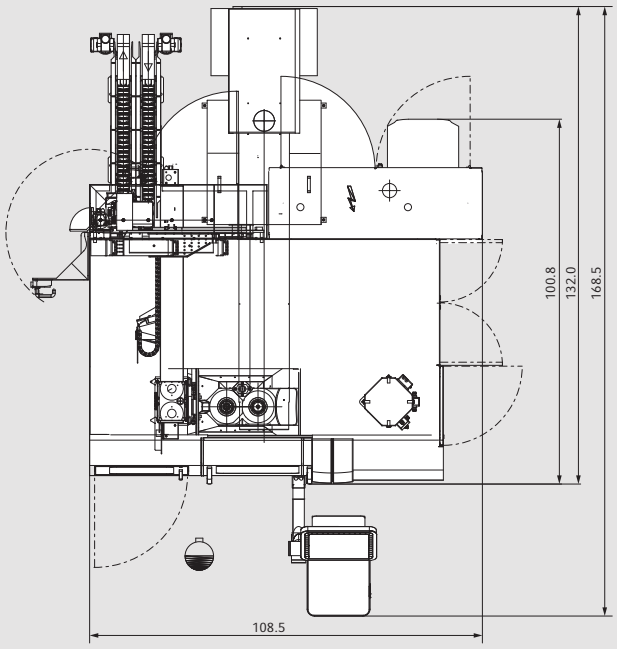

Measurements in inches

CTV Series

Technical data

		CTV 160 in STEALTH design	CTV 250 in STEALTH design
Work area			
Maximum chuck diameter	in.	8.7	10.2
Maximum swing diameter	in.	9.4	12.6
Maximum workpiece diameter	in.	ø 6.3	ø 8.7
Maximum workpiece height	in.	6.3 (7.9)**	6.3 (7.9)**
Main drive			
Maximum speed	rpm.	6,000	5,000
Power (40 / 100% DC)	hp.	28.2 / 21.5	42.9 / 33.5
Torque (40 / 100% DC)	ft./lbs.	129.8 / 99.6	265.5 / 191.8
Spindle head (flat flange)		140 h5	170 h5
Front spindle bearing	in.	ø 3.9	ø 4.7
Rear spindle bearing	in.	ø 3.9	4.7
Tool holder			
12-station turret		12 × VDI 30	12 × VDI 40
Driven tools**	rpm.	12 × 4,000	12 × 4,000
Torque / power (40% DC)	ft./lbs./ hp.	13.3 / 7.2	20.7 / 15.2
Turret indexing time	Sec.	0.25	0.25
Multi-function plate** for 2 additional tools		VDI 30 // 140 × 390	VDI 40 // 140 × 390
Turn-mill swiveling tool carrier: A axis			
Maximum speed	rpm.	–	–
Acceleration	rpm./s²	–	–
Torque (40 / 100% DC)	ft./lbs.	–	–
Turn-mill swiveling tool carrier: Milling spindle			
Number	#	–	–
Maximum speed	rpm.	–	–
Performance (40 / 100% DC)	hp.	–	–
Torque (40 / 100% DC)	ft./lbs.	–	–
Tool holder			
Turn-mill swiveling tool carrier: Turning tool			
Tool holder		–	–
Linear axes			
X / Y / Z axis travel	in.	28.5 / – / 11.8	28.5 / – / 11.8
X / Y / Z rapid traverses	ipm.	2,362.2 / – / 1,574.8	2,362.2 / – / 1,574.8
X / Y / Z acceleration	ft./s²	14.8 / – / 14.8	14.8 / – / 18.0
X / Y / Z feed force	lbf.	899.2 / – / 1,348.9	1,236.4 / – / 1,798.5
X / Y / Z ball screws	in.	1.3 / – / 1.3	1.3 / – / 1.3
Roller guideways (size) X / Y / Z	in.	1.8 / – / 1.8	1.8 / – / 1.8
Accuracy			
$P_{smax.}$ (X / Y / Z)	in.	0.0002 / – / 0.0001	0.0002 / – / 0.0001
Automation			
Automation // example		• // Trailing prism conveyor belt	• // Trailing prism conveyor belt
Number of slots per size (ø 2.8 // ø 3.3 // ø 4.7 // ø 6.3 // ø 8.7 in.)	#	36 // 27 // 24 // 18 // –	40 // 30 // 24 // 20 // 16
Number of slots per size (ø 3.1 in. // ø 5.1 in. // ø 9.1 in.)	#	–	–
Loading time per workpiece	Sec.	5 (at 19.8 lbs.)	7 (at 25.4 lbs.)
Machine weight	lbs.	13,227.7	13,227.7
Controls			
SIEMENS 840D solutionline Operate		•	•
TRANSLINE		**	**
DMG MORI ERGO*line*® panel with 19" monitor		–	–
DMG MORI SLIM*line*® panel with 15" monitor		•	•

• Standard, – not available, * with linear drive, ** optional

	CTV 160 (*linear*)	CTV 250 (*linear*)	CTV 315 *linear* in STEALTH design	CTV 250 DF
	8.7	10.2	12.4	10.2
	9.4	12.6	13.4	12.6
	ø 6.3	ø 8.7	ø 11.8	ø 8.7
	6.3 (7.9)**	6.3 (7.9)**	8.3	9.1
	6,000	5,000	5,000	5,000
	28.2 / 21.5	42.9 / 33.5	42.9 / 33.5	42.9 / 33.5
	129.8 / 99.6	265.5 / 191.8	265.5 / 206.5	265.5 / 191.8
	140 h5	170 h5	170 h5	170 h5
	ø 3.9	ø 4.7	ø 5.1	ø 4.7
	ø 3.9	ø 4.7	ø 5.1	ø 4.7
	12 × VDI 30	12 × VDI 40	12 × VDI 40	–
	12 × 4,000	12 × 4,000	12 × 4,000	–
	13.3 / 7.2	20.7 / 15.2	20.7 / 15.2	–
	0.25	0.25	0.25	–
	VDI 30 // 140 × 390	VDI 40 // 140 × 390	T-nut / 340 × 445	–
	–	–	–	90
	–	–	–	15
	–	–	–	505.2 / 404.2
	–	–	–	1 (2**)
	–	–	–	6,000
	–	–	–	19.4
	–	–	–	33.9
				HSK-C63-F80
	–	–	–	1 × CAPTO C5
	25.6 / ±3.5 / 11.8	25.6 / +3.5, –2.6 / 11.8	43.3 / ±2.0 / 11.8	25.6 / +5.1, –2.0 / 11.8
	2,362.2 / 1,574.8 / 1,574.8	2,362.2 / 1,574.8 / 1,574.8	3,937.0 / 393.7 / 1,771.7	2,362.2 / 1,574.8 / 1,574.8
	19.7 /14.8 / 18.0	19.7 / 16.4 / 18.0	26.2 / 26.2 / 21.3	13.1 / 16.4 / 16.4
	629.5 / 674.4 / 1,348.9	629.5 / 1,236.4 / 1,798.5	786.8 / 1,348.9 / 1,348.9	1,236.4 / 1,236.4 / 1,798.5
	1.3 (*linear**) / 1.3 / 1.3	1.3 (*linear**) / 1.3 / 1.3	*linear* / 1.6 / 1.6	1.6 / 1.3 / 1.3
	1.8	1.8	1.8	1.8
	0.0002 / 0.0001 / 0.0001	0.0002 / 0.0001 / 0.0001	0.0002 / 3 / 3	0.0002 / 0.0001 / 0.0001
	** // Trailing prism conveyor belt	** // Trailing prism conveyor belt	** // Trailing prism conveyor belt	** // Metal link conveyor
	40 // 30 // 24 // 20 // –	40 // 30 // 24 // 20 // 16	–	dependent on components
	–	–	52 // 26 // 13	dependent on components
	5 (at 19.8 lbs.)	7 (at 25.4 lbs.)	8 (at 55.1 lbs.)	dependent on components
	13,227.7	13,227.7	16,534.7	14,330.0
	•	•	•	•
	–	–	**	–
	•	•	–	–
	–	–	•	•

CTV Series

Options

	CTV 160 in STEALTH design	CTV 250 in STEALTH design
Machine options		
Linear drive on the X-axis	–	–
C-axis and tool drive	○	○
Y-axis	–	–
Measuring probe for workpiece measuring including cover	○	○
Multi-function plate	○	○
Aluminum package	○	○
Band filter system, 158.5 gal., 116.0 psi.	○	○
Band filter system, 258.9 gal., 116.0 / 290.1 psi., coolant unit	○	○
Band filter system, 258.9 gal.,116.0 / 290.1 / 1,160.3 psi., coolant unit	○	○
Differential pressure clamping	○	○
Glass scale on the X-axis	●	●
Glass scale on the Y-axis	–	–
Glass scale on the Z-axis	●	●
Chuck-changing device	○	○
Automation		
Trailing prism conveyor belt to the right or left	●	●
Prism frame (ø 2.8 in., ø 3.3 in., ø 4.7 in. or ø 6.3 in.)	○	–
Prism frame (ø 2.8 in., ø 3.3 in., ø 4.7 in., ø 6.3 in. or ø 8.7 in.)	–	○
Prism frame (ø 3.1 in., ø 5.1 in. or ø 9.1 in.)	–	–
Rotary indexing table to the right or left	–	–
Additional options		
Operating hour meter	●	●
Spray gun	○	○
Connection for operation data collection	○	○
4-color signal lamp	●	●
Tool breakage detection	○	○
Connection for an oil mist filter	○	○
Mechanical oil mist filter	○	○
Siemens 840 sl control system		
ShopTurn 3G	–	–
TRANSLINE	○	○

● Standard, ○ optional, – not available

CTV 160 (*linear*)	CTV 250 (*linear*)	CTV 315 *linear* in STEALTH design	CTV 250 DF
○	○	●	–
○	○	○	●
●	●	○	●
○	○	○	○
○	○	○	–
○	○	○	–
○	○	○	–
○	○	○	–
○	○	○	–
○	○	○	○
●	●	●	●
●	●	–	●
●	●	○	●
○	○	○	○
○	○	○	–
○	–	–	–
–	○	–	–
–	–	○	–
○	○	–	–
●	●	●	○
○	○	○	○
○	○	○	○
●	●	●	○
○	○	○	○
○	○	○	○
○	○	–	–
○	○	○	–
–	–	○	○

DMG MORI USA

DMG MORI LOS ANGELES
5740 Warland Dr.
Cypress, CA 90630
Tel.: (562) 430-3800
Fax: (562) 430-5570

DMG MORI SAN FRANCISCO
2629 7th St., Ste. C
Berkeley, CA 94710
Tel.: (866) 814-7238
Fax: (510) 845-4924

DMG MORI CHICAGO
2400 Huntington Blvd.
Hoffman Estates, IL 60192
Tel.: (847) 593-5400
Fax: (847) 593-5433

DMG MORI BOSTON
753 Forest St., Ste. 200
Marlborough, MA 01752
Tel.: (508) 481-2500
Fax: (508) 481-2520

DMG MORI DETROIT
29050 Cabot Dr.
Novi, MI 48377
Tel.: (248) 324-1928
Fax: (248) 324-0710

DMG MORI CHARLOTTE
4345 Morris Park Dr.
Charlotte, NC 28227
Tel.: (704) 940-3380
Fax: (704) 840-1101

DMG MORI CINCINNATI
5333 Mulhauser Rd.
Hamilton, OH 45011
Tel.: (513) 874-2736
Fax: (513) 874-3254

DMG MORI DALLAS
9001 Currency St.
Irving, TX 75063
Tel.: (972) 929-8321
Fax: (972) 929-8226

DMG MORI HOUSTON
3403 N. Sam Houston Pkwy. West, #100
Houston, TX 77086
Tel.: (713) 365-9500
Fax: (713) 365-9515

DMG MORI SEATTLE
19625 62nd Ave. South, Ste. A109
Kent, WA 98032
Tel.: (253) 872-1661
Fax: (253) 872-2188

MONTFORT ADVERTISING

CE PRO.D5897/0413US D5744/0613AD19 Subject to modification. Technical update rights reserved. The machines depicted here may include some options, equipment and CNC alternatives.

DMG MORI USA
2400 Huntington Blvd., Hoffman Estates, IL 60192
Tel.: (847) 593-5400, Fax: (847) 593-5433
info@dmgmori.com, www.dmgmori.com

DMG MORI