HS664

High performance milling systems

FIDIA

Giving shape to design

HS664 is a line of 3, 4 and 5 axis milling centres with X, Y and Z travel of 600, 560 and 400 mm, respectively.
HS664 V machines are equipped with a 1000x550 mm fixed table, while HS664 RT machines have an integrated roto-tilting worktable.

The HS664 line features:

- high acceleration and axis feed;
- high spindle rotation speed;
- sophisticated Fidia C1 numerical control algorithms;
- high-rigid cast iron bed.

HS664 milling centres are versatile, suitable for the machining of both 60 HRC and harder steels as well as light alloys and graphite.

The characteristic moving portal structure of the HS664 guarantees the maximum of rigidity and performance at any working condition.
The design pays particular attention to the containment and disposal of swarf, making these machines suitable also for mass production with heavy stock removal.

The styling of the guards allows for optimum viewing of the part being machined as well as ease of loading with a bridge crane.

HS664 milling centres can be equipped with different spindles designed to satisfy the most advanced market requirements: from a powerful 24,000 1/min spindle with HSK63 tool holder to a very fast 36,000 1/min spindle with a robust HSK 50 tool holder.

HS664 machine tools can mill complex three-dimensional surfaces using part-programs that are either generated by resident or external CAM systems, or by milling digitized data.

HS664 milling centres use the Fidia C1 numerical control.

The most usual applications include the machining of dies for forging, moulds and models for footwear, moulds and dies for domestic appliances, toys, jewelry and for the electronics industry, components for the aeronautics industry and the machining of copper and graphite electrodes.

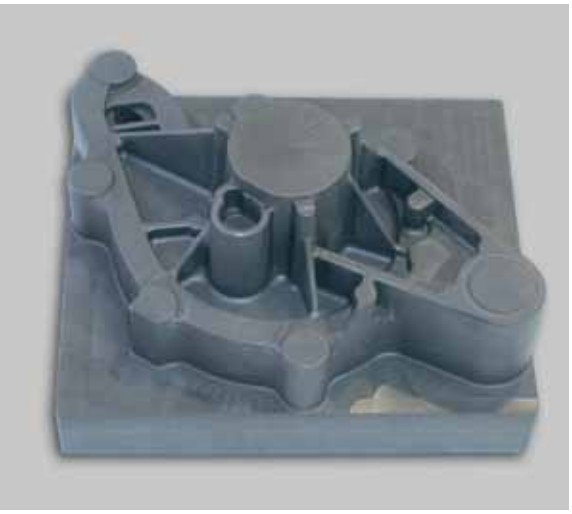

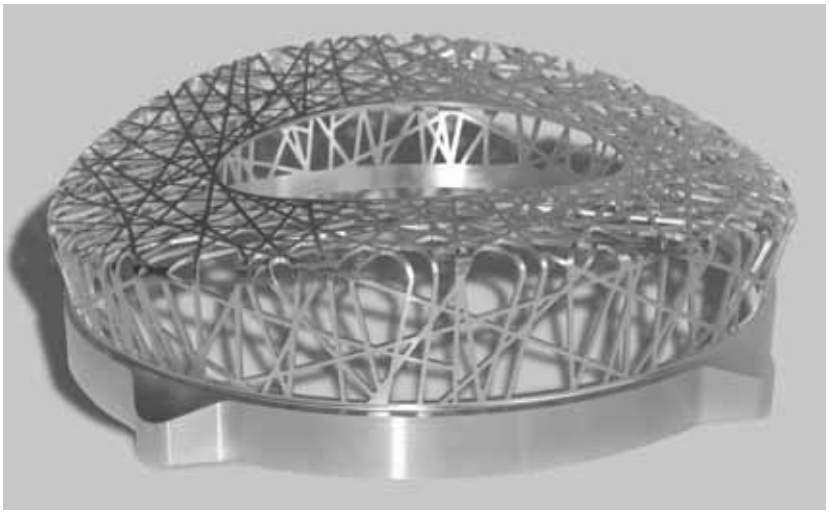

Technical solutions

All linear movements are performed by the spindle head. The fixed bed structure ensures:

- stability, independently of the weight of the workpiece being machined;
- optimum visibility of the part being machined;
- wide range of customization;
- reduction of overall machine tool dimensions.

The cast iron bed does not require dedicated foundations, while the moving structures, made of steel, provide the best mass-rigidity ratio in order to guarantee high dynamic performance.

Linear axes

Roller bearings on linear axis allow:

- high feeds
- low friction, reducing machine structure heating
- no backlash.

The axis drives use digital technology with the following advantages:

- optimization of machine tool dynamic behaviour;
- improved machining resolution and accuracy.

Axis movement is driven by recirculating ball screws and brushless motors.
The guides and recirculating ball screws are automatically grease lubricated.
The linear axis feedback take place through optical scale transducers.

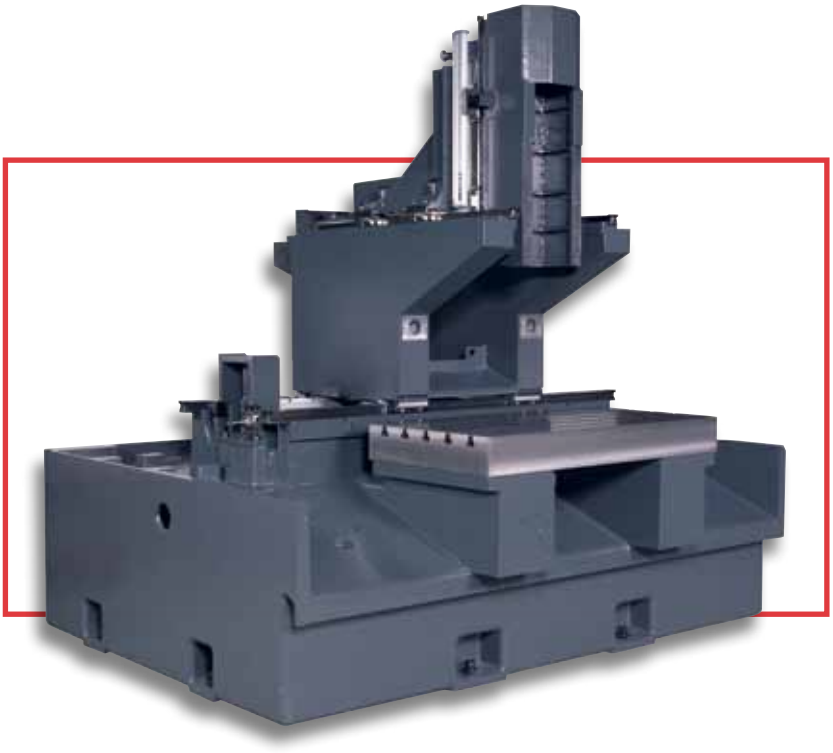

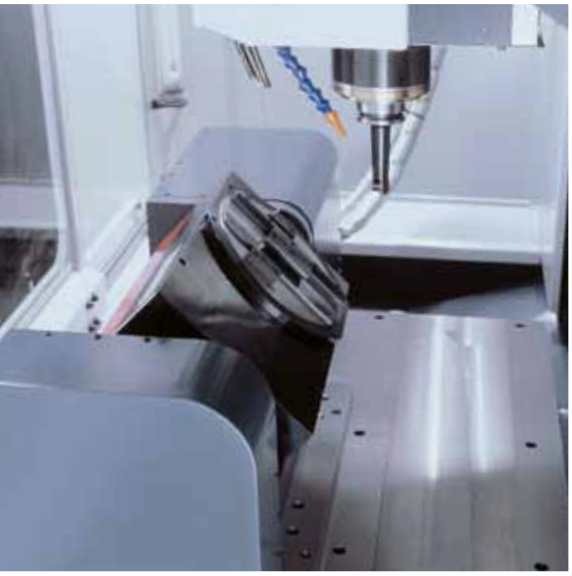

Spindles

In order to provide the best solution for specific requirements, spindles with a power of up to 25.8 kW and a maximum speed of 36,000 1/min are available.
All spindles have ceramic ball bearings and are refrigerated by the circulation of coolant at a controlled temperature.
The vectorial control method used for the electrospindle drives ensures optimum behaviour, even at low rpm.

V Version

The HS664 V version has a fixed worktable quite larger than the work area. The table is made of cast iron with T slots for easy clamping of the workpiece, centering and automatic locking systems; this also facilitates the attachment of additional rotary tables with a 4th axis and tilting tables with 4th and 5th axes.

RT Version

The HS664 RT version, equipped with its integrated rototilting worktable with a faceplate of up to 400 mm in diameter, is the solution for 5 axis simultaneous complex machining where heavy stock removal is required. This version is suitable both for the moulds and dies sector and for the aeronautics industry.
The cast iron worktable is carefully integrated in the bed to allow for the machining of diameter up to 570 mm workpieces and to ensure swarf disposal while easing maintenance.
The 4th and 5th axes are fitted with direct transducers and can be operated either in continuous interpolation or clamped by hydraulically operated brakes.

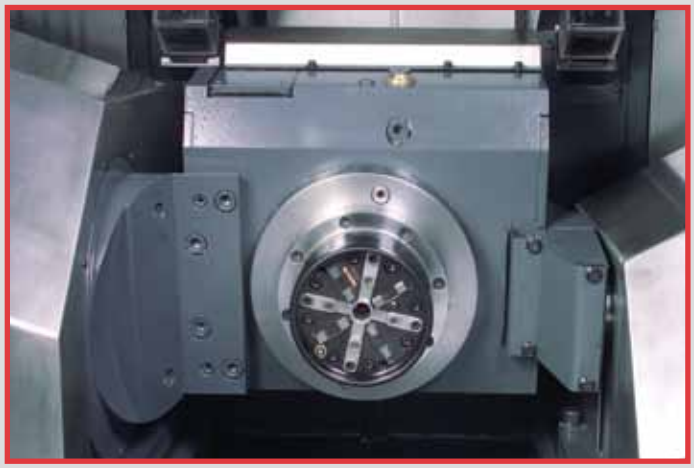

Automatic tool change

A standard chain housing 20 tools is mounted in the X axis slide and protected from swarf and coolant. The tool change can be extended up to 42 positions.

Work space

The work space has been designed to allow for full containment of the swarf and ease of disposal. The cover can easily be opened to enable the workpiece and equipment to be loaded from above with a bridge crane.

Tool presetting

Automatic presetting of the tool length on the machine simplifies tooling procedures for new machining operations or when replacing worn tools.
Indispensable for unmanned machining operations, tool presetting is available in a digital probe version or with a focused laser probe.
In addition to checking the tool length, the focused laser system also checks the tool diameter and shape.
Also available, measure and verification of special tools:

- multiple cutting areas;
- angular heads;
- advanced ID Chips management.

Tool lubrication / cooling and swarf conveyor

Minimum lubrication and tool lubrication / cooling using soluble oils are supplied as standard together with a swarf collection tank on wheels.
The swarf conveyor is the scraper type. Adequate jets of coolant ensure that the work area is kept clean even in the heaviest stock removal conditions. The conveyor is fitted with self-cleaning filters and with a pump for the external lubrication / cooling of the tool. The 25.8 kW spindle can have an high pressure (50 bar) coolant through the shaft.

Dust suction unit

Essential when machining graphite or resin, the high capacity suction device is mounted externally to the machine tool. It is equipped with self-cleaning filters with a high degree of filtration that are able to operate in the presence of explosive dust.
The total absence of any moving parts below the work surface guarantees the maximum efficiency of use of the HS664 in these kinds of applications.

Automatic workpiece magazine

The automatic magazine loader, for 8 or 16 workpieces, significantly extends machine tool autonomy. Copper or graphite electrodes, aluminium parts, steel blocks or models can easily be milled in unmanned machining mode.
The magazines can be interfaced both with the 3 axis versions and the 5 axis versions. They are mounted on guides to give operator access to the front part of the machine tool and to facilitate the fine-tuning of programs.

Flexible Manufacturing System

The platform integrates a pallet system shared by two or more machines. A powerful dedicated software, automatically manages and optimize the flow of production without intervention of the machine operator. Such a way of functioning pursues the following goals:

- reduction of waiting times;
- simplification of programming;
- optimization of tool wear-out;
- full monitoring of production flow;
- reduction of human error risks;
- never-ending 7/7 & 24/24 production;

Each machine can be also used in a standalone way, nonetheless granting the normal functioning of the FMS system with the other machines.

The FIDIA Integrated System

The Fidia numerical controls takes full advantage of the potential offered by combining the performance of the Pentium 4 and the RISC Power PC processors. It is conceived to manage the most sophisticated high speed applications running at 5 axes with RTCP. It is equipped with Windows XP Professional operating system in multitasking mode.

Simple and Reliable

The new compact Fidia CNC "nc15" is equipped with a 15'' touch screen monitor that can import mathematical models in formats such as IGES, VDA-FS, DXF and DWG, simplifying the visualisation and creation of tool paths on board.
The HI-MILL package is a 3D CAM fully integrated in the CNC that allows the management of 3+2 and 3 axes machining.
ISOGRAPH, on the other hand, is a 2½ CAD-CAM suitable for machining such as pocketing, flattening, profiling, boring and other similar operations.

High Speed Milling

Fidia always believed with no hesitation in high speed milling and devouted itself to the development of new numerical control algorithms, getting success all over the world since the first years of the 90's. The combination between CNC and Fidia XPower operations allowed an incredible increase of milling performances, and the direct access to all the activation parameters permits to check the engines as best as it can, with shorter reaction times if compared to unintegrated solutions.

HS664

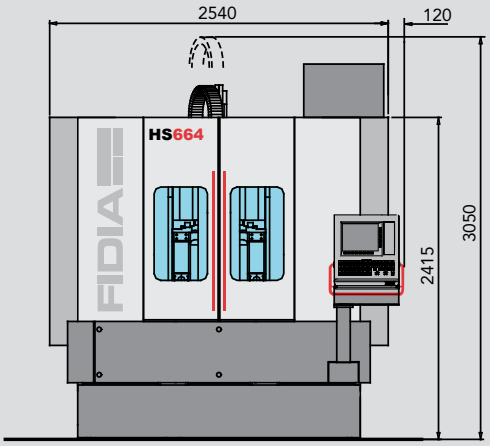

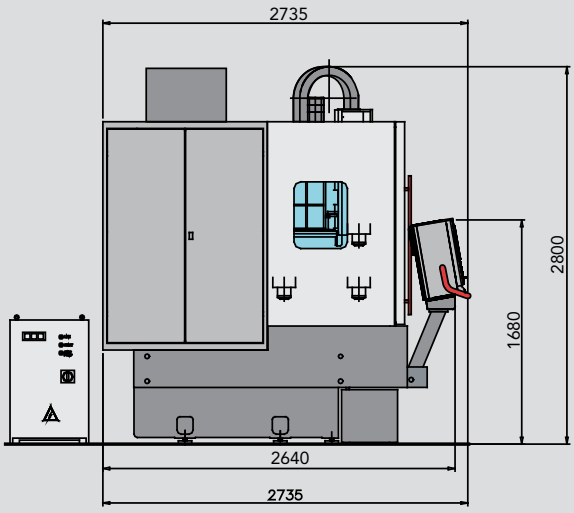

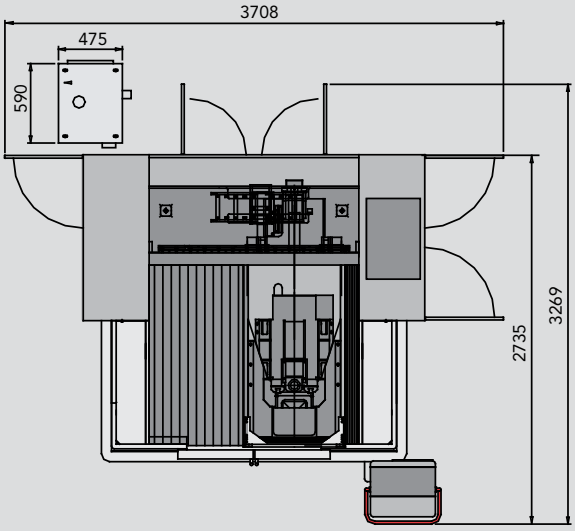

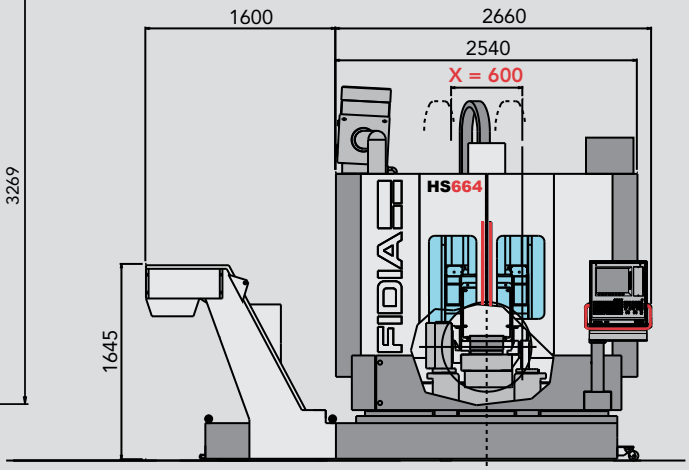

HS664 - WPM50/8

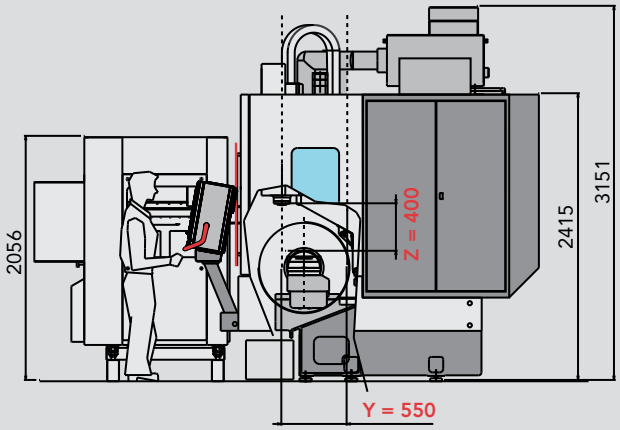

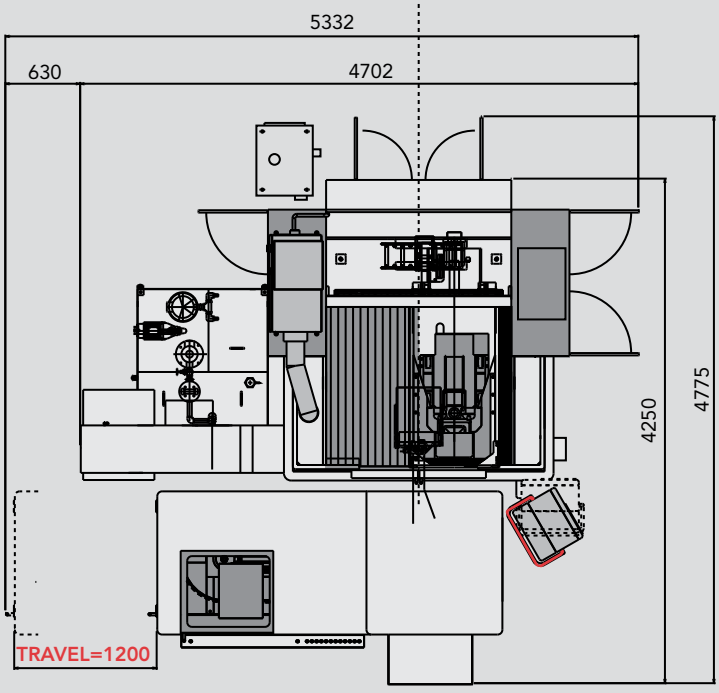

TECHNICAL DATA	
LINEAR AXIS TRAVEL	
X	600 mm (24”)
Y	560 mm (22”)
Z	400 mm (16”)
LINEAR AXIS FEED	
X Y Z	30 m/min (1181 ipm)
POSITIONING ACCURACY	
X Y Z	± .003 mm (± .00012”)
TOOL MAGAZINE	
positions	20 - 30 - 42
MAIN OPTIONS	
	Swarf conveyor
	Tool presetting
	Graphite dust suction unit
	Digitizing
	Automatic magazine for 8 or 16 workpieces
	Continuous table with a horizontal axis Ø 200 or 250 mm (8” or 10”)
	Indexed tilting table Ø 180 mm (7”)
	Continuous tilting table Ø 200 or 250 mm (8” or 10”)
WEIGHT	
	6100 kg (13448 lbs) in the standard HS664 V configuration

MILLING HEADS	M3A/19-36	M3A/25-24
MAX. SPINDLE SPEED	36000 1/min	24000 1/min
MAX. POWER	19.5 kW	25.8 kW
TOOLHOLDER	HSK50E	HSK63A/E

STANDARD TABLES	HS664 V	HS664 RT
	Worktable	TRT/L-570 Tilting and rotary table
DIMENSIONS	1000x550 mm (39” x 22”)	Faceplate Ø 400 mm (16”)
LONGITUDINAL T SLOTS	N° 4 + 1 (H7), width 18 mm (0.3”), pitch 100 mm (4”)	N°6 x 14 mm (0.55”)
MAX. ROTATION DIAMETER		Ø 520 mm (20”)/ 570 mm (22”)
A AXIS TRAVEL		±110°
C AXIS TRAVEL		rollover
CAPACITY	700 kg (1543 lbs)	350 kg (771 lbs)

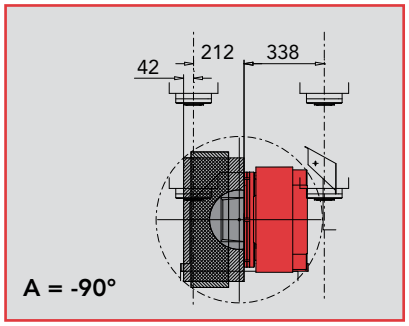

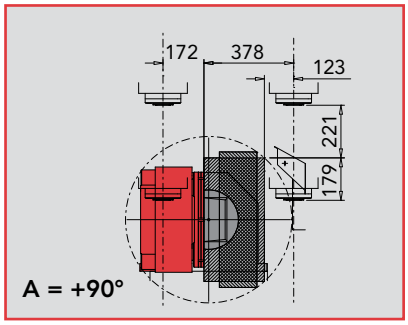

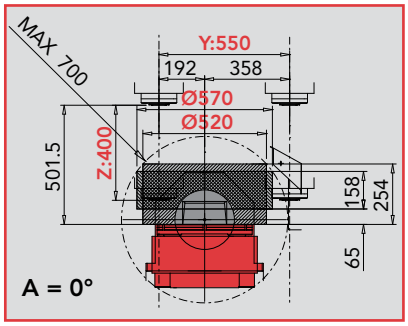

ENG-13/06

FIDIA S.p.A.
Corso Lombardia, 11
10099 San Mauro Torinese - TO - ITALY
Tel. +39 011 2227111
Fax +39 011 2238202
info@fidia.it
www.fidia.com

FIDIA GmbH
Robert-Bosch-Strasse 18
63303 Dreieich-Sprendlingen - GERMANY
Tel. +49 6103 4858700
Fax +49 6103 4858777
info@fidia.de

FIDIA Sarl
47 bis, Avenue de l'Europe
B.P. 3 - Emerainville
77313 Marne La Vallee Cedex 2 - FRANCE
Tel. +33 1 64616824
Fax +33 1 64616794
info@fidia.fr

FIDIA Iberica S.A.
Parque Tecnológico de Zamudio
Edificio 208 - 48170 Zamudio - Bilbao - SPAIN
Tel. +34 94 4209820
Fax +34 94 4209825
info@fidia.es

OOO FIDIA
24/27, Sadovaya Samotechnaya str.
127051, Moscow - RUSSIA
Tel : +7 (495) 792 52 45
Fax : +7 (495) 792 52 47

FIDIA Co.
1397 Piedmont , Suite 800
Troy - Michigan 48083 - USA
Tel. +1 248 6800700
Fax +1 248 6800135
info@fidia.com

FIDIA DO BRASIL LTDA
Av. Salim Farah Maluf, 4.236 - 3° andar
Móoca - SÃO PAULO - Cep 03194-010 - BRAZIL
Tel. +55 11 29657600
Fax +55 11 20212718
info@fidia.com.br

FIDIA INDIA PRIVATE LTD
H Block, Plot No. C-181
M.I.D.C. Chinchwad,
PUNE - 411019 - INDIA

FIDIA JVE
Beijing Fidia Machinery & Electronics Co., Ltd
Room 1509, 15/F Tower A. TYG Center Mansion
C2 North Road East Third Ring Road,
Chaoyang District
100027 BEIJING - P.R. CHINA
Tel. +86 10 64605813/4/5
Fax +86 10 64605812
info@fidia.com.cn

FIDIA JVE
Shanghai Office
28/D, No.1076, Jiangning Road
Putuo District
Shanghai 200060 - CHINA
Tel. +86 21 52521635
Fax +86 21 62760873
shanghai@fidia.com.cn

Service centres:

FIDIA GmbH - SERVICE CZ
CZ- 74706 Opava
Tel/Fax +420 553 654 402
j.vecerek@fidia.de

3H MAKINA
Atasehir Bulvari, Ata 2/3
Plaza, Kat: 9 No: 80
Atasehir - Istanbul - TURKEY
Tel.: +90 216 456 10 43
Fax: +90 216 456 75 23
ekosova@3hltd.com

P.V. ELECTRONIC SERVICES C.C.
P.O. Box 96
Hunters Retreat 6017
Port Elisabeth SOUTH AFRICA
Tel. +27 41 3715143
Fax +27 41 3715143
pvanek@sancelink.co.za

AXIS SYSTEMS
Flat No.9, Building No.13,
Shraddha Garden, Chinchwad
Pune 411033 - INDIA
Cell. +91 9881245460
Telefax +91 20 27656682
panks@axis-fidia.in

SHIYAN FIDIA SERVICE CENTRE
N.84 Dong Yue Road,
Shiyan, Hubei - CHINA
Tel. +86 719 8225781
Fax +86 719 8228241

CHENGDU FIDIA SERVICE CENTRE
Huang Tian Ba
Chengdu, Sichuan - CHINA
Tel. +86 28 87406091
Fax +86 28 87406091

IE-MAT s.r.l.
Bv. De Los Alemanes No. 3387
5022 Barrio Los Boulevares
Cordoba - X5022EOF
ARGENTINA
Tel. +54 0351 4750483
Fax +54 0351 4750483
ie-mat@ie-mat.com.ar

Manufacturing plants:

FIDIA S.p.A.
Via Valpellice, 67/A
10060 San Secondo di Pinerolo
TO - ITALY
Tel. +39 0121 500676
Fax +39 0121 501273

FIDIA S.p.A.
Via Gorizia, 162
47100 Forlì
ITALY
Tel. +39 0543 770511
Fax +39 0543 795573
info@meccanicacortini.it

SHENYANG FIDIA NC & MACHINE CO., LTD.
No. 1 17 Jia Kaifa Rd.
Shenyang Economic & Technological Development Zone
110141 Shenyang - P.R. CHINA
Tel. +86 24 25191218/9
Fax +86 24 25191217
info@fidia.com.cn

Research centres:

FIDIA S.p.A.
c/o Tecnopolis
Str. Provinciale per Casamassima Km 3,
70010 Valenzano
Bari - ITALY
Tel. +39 080 4673862

SHENYANG FIDIA NC & MACHINE CO., LTD.
5th Floor, South Administrative building,
Tongji University,
n.4800 Capo An Road. Jiading District,
201804 Shanghai - CHINA
Tel. +86 21 69585811
Fax. +86 21 69585822

Windows is a registered of Microsoft.
Pentium is a registered trademark of Intel.
HI-MILL is a registered trademark of FIDIA.

COPYRIGHT 06/2013 © FIDIA S.p.A.
San Mauro Torinese, Italy

The products described in this catalogue are subject to technical updating without prior notice.