HABRAMA

PPSM High Precision Profile Grinding Machines

PPSM Type 2200 - 10200 | For grinding racks up to module 18, broaches, saw blades and special profiles

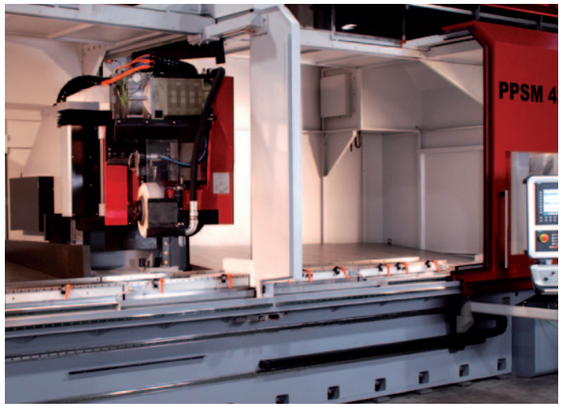

Working Area
The high precision profile grinding machine moves a column in x-direction and works with a programmable servomotor-driven C-axis with a swivel area of -30° to +30° for helical gearings.

Control / User interface
Siemens 840D sl with Sinamics-drives in an air conditioned cabinet. Equipped for teleservice.

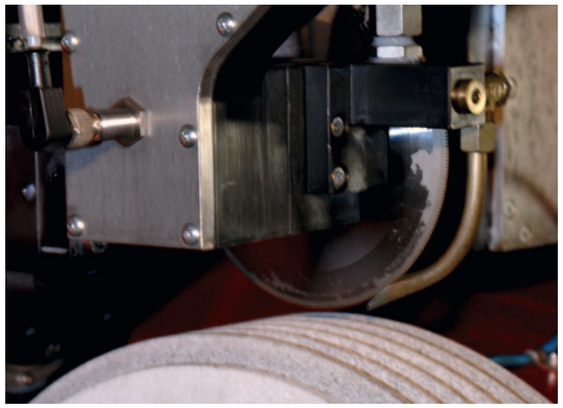

Dressing during primary processing time by freely programmable 3-axis-dressing unit with diamond contouring wheel
The dressing of the grinding wheel during the grinding process with a 3-axis CNC-controlled diamond wheel guarantees a constantly high quality and less downtime.

Details and benefits

Highly rigid construction
The rigid construction guarantees a long lifespan combined with highest precision

Highest dynamic
State-of-the-art linear drive technology ensures increased productivity

Non-stop production
- With the option „partition“ the insertion can take place during primary processing time without any downtime
- Standard and fully automatic position determination
- Travelling column design for loading and unloading by hand, by crane or by handling system

Easy-to-use
With the sophisticated operating concept ergonomic handling and short training units are possible

Innovative details
Cylindrical grinding wheel adaptors guarantee a fast change of grinding wheels

Precise incremental length measuring systems

Cooling unit
Cooling unit with integrated deep-bed filter.

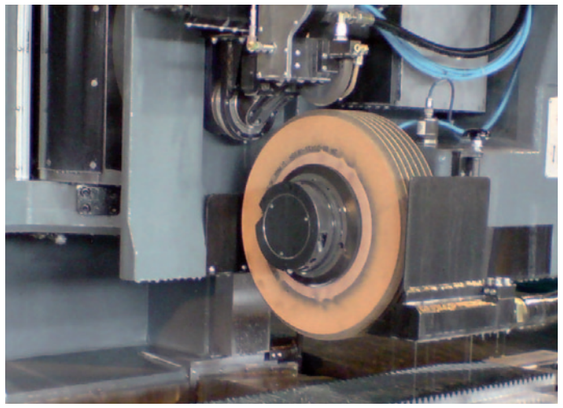

Grinding head with balancing system as standard
Fully automatic balancing system which recognizes and removes unbalances at a very early stage. This guarantees a high quality of the workpiece surfaces and a long tool life of the spindle.

Technical Data

Working Area	PPSM 2200	PPSM 3200	PPSM 4200	PPSM ...10200
X - Axis lengthwise	2.200 mm	3.200 mm	4.200 mm	... 10.200 mm
Y - Axis crosswise	500 mm			
Z - Axis vertical	410 mm			
C - Axis	+30° / -30°			
B - Axis (option)	+20° / -20°			
U - Axis (balancing system)	105 mm			
W - Axis (balancing system)	125 mm			
B2 - Axis (balancing system)	+20° / -20°			
Machine table				
Dimensions correspond with clamping surface	390 x 3.750 mm	390 x 4.750 mm	390 x 5.750 mm	390 x 11.750 mm
Max. load	4.000 kg	6.000 kg	8.000 kg	... 20.000 kg
T - Sections	4 piece			
T - Section distance	90 mm			
T - Section width	18 H7 mm			
X - Axis lengthwise				
Speed	21 m/min			
Incremental lenght measuring system	Direct positioning accuracy ±0,002 mm			
Y - Axis crosswise				
Speed	10 m/min			
Incremental lenght measuring system	Direct positioning accuracy ±0,002 mm			
Z - Axis vertical				
Speed	6 m/min			
Incremental lenght measuring system	Direct positioning accuracy ±0,002 mm			
C - Axis				
Speed	2 1/min			
Absolute shaft encoder	Direct positioning accuracy ±0,003°			
B - Axis (optional)				
Speed	6 1/min			
Absolute shaft encoder	Direct positioning accuracy ±0,003°			
U - Axis				
Speed	4 m/min			
Incremental lenght measuring system	Direct positioning accuracy ±0,002 mm			
W - Axis				
Speed	4 m/min			
Incremental lenght measuring system	Direct positioning accuracy ±0,002 mm			
B2 - Axis				
Speed	6 1/min			
Absolute shaft encoder	Direct positioning accuracy ±0,003°			

Technical Data

Grinding head				
Power consumption	45 kW (S6 at 40%)			
Speed range	max. 4000 1/min			
Grinding wheel adapter	100 mm H5			
Cutting speed, programmable	constant 10-80 m/s			
Grinding wheel	kvitrified or resin-bonded grinding wheel			
Grinding wheel width max.	101 mm			
Grinding wheel Ø	min. 210mm - max 400mm			
Hole diameter of grinding wheel	152,4 mm (6 inch)			
Grinding area	up to module 18, apecial profiles freely programmable			
Cooling unit				
Cooling unit	approx. 4.000 l with integrated deep-bed filter			
Machine				
Extraction of emulsion mist	2 x 1.800 m³/h			
CNC-control	Siemens 840D sl			
Drives	Siemens			
Total connected load	100 kVA			
Machine type / weight	PPSM 2200 / 20.000 kg	PPSM 3200 / 22.000 kg	PPSM 4200 / 24.000 kg	PPSM...10.200/ 36.000 kg

Options

3 clamping options (hydraulic, magnetic, hydraulic-magnetic)
Automatic sliding doors
B-Axis servomotor controlled
34 kW Cooling unit for a constante cooling agent temperature /machine temperature
Automatic adjustment of cooling agent supply
Partition (separation into two working areas/electrical)

Partition (option)
From a working length of 4m the machine can be equipped with a fully automatic partition.

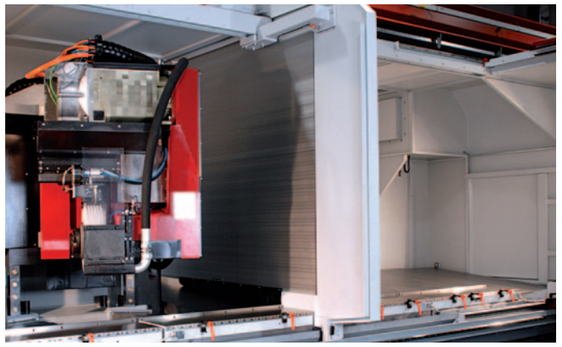

Dimensions

Machine type	PPSM 2200	PPSM 3200	PPSM 4200	PPSM 5200	PPSM...10200
A = Stroke	2.200 mm	3.200 mm	4.200 mm	5.700 mm	10.700 mm
B = Machine length	ca. 5.200 mm	ca. 6.200 mm	ca. 7.200 mm	ca. 8.700 mm	ca. 13.700 mm
C = Machine with cooling unit	ca. 7.700 mm	ca. 8.700 mm	ca. 9.700 mm	ca. 11.200 mm	ca. 16.200 mm
D = Space required with doors open	ca. 7.700 mm	ca. 8.700 mm	ca. 9.700 mm	ca. 12.200 mm	ca. 17.200 mm

Technical Drawing – layout plan, working area

Front view

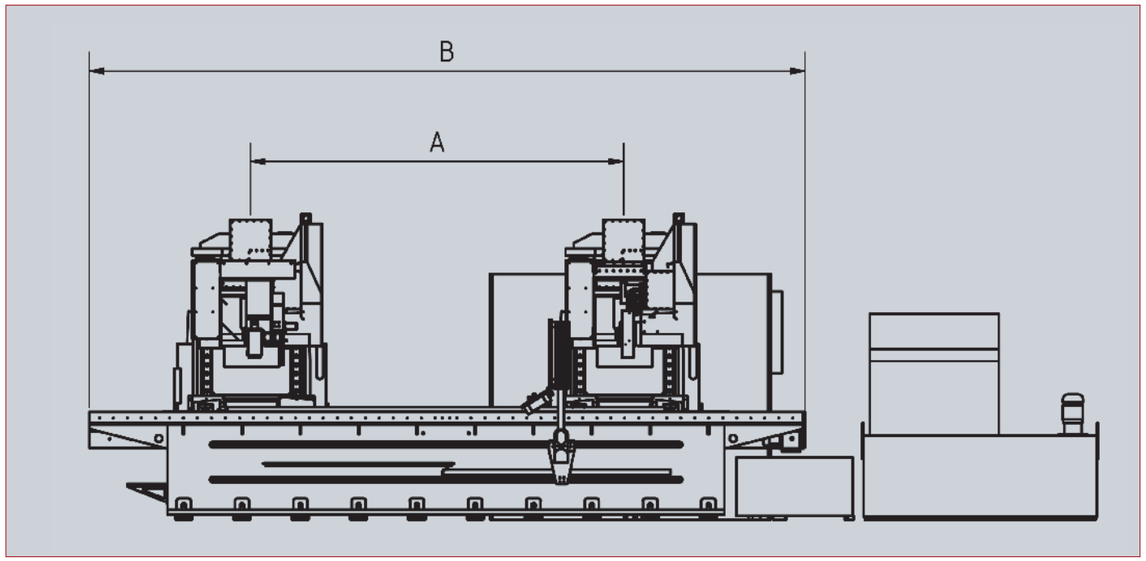

Technical Drawing – layout plan, working area

Side view

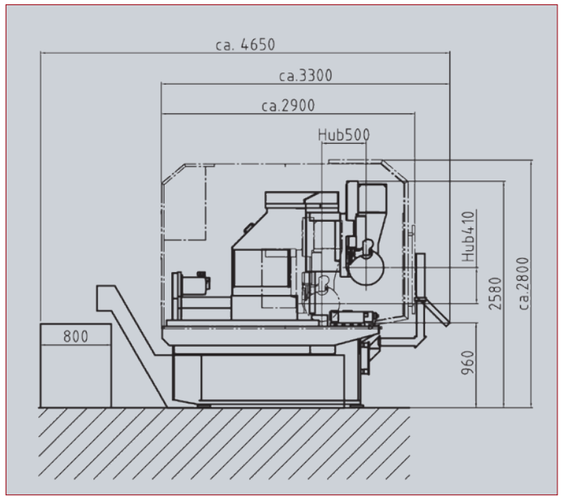

Top view

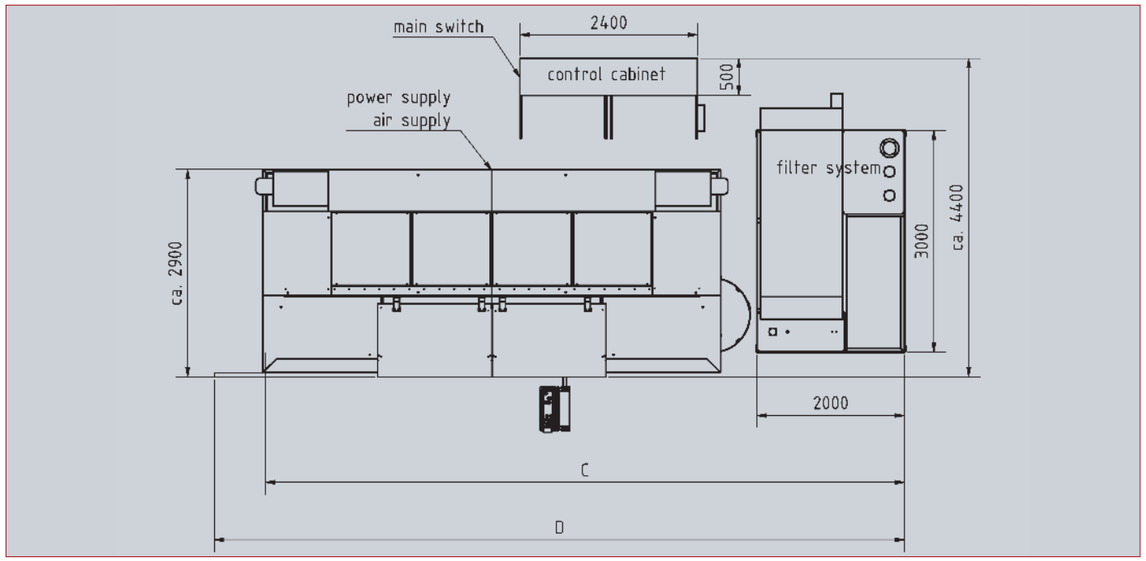

other products:

HABRAMA UVF - SERIES

Universal Gear Milling Center
UVF-Center II - III | For gear cutting of gear wheels, worms, worm wheels, spline shafts, trapezoidal thread spindles and timing belt pulleys

HABRAMA PPFM - SERIES

High Precision Milling Machines
PPFM Type 2200 - 10200 | For milling racks up to modul 36, broaches, saw blades and special profiles

HABRAMA ZFM compact - SERIES

Rack milling machine
ZFM compact Typ 2200 - 3200 | For milling racks up to modul 36, broaches, saw blades and special profiles

Habrama GmbH High Precision Grinding and Milling Machines

Benzstrasse 13 | D-89155 Erbach | Germany
Tel +49 7305 9566 25-0 | Fax +49 7305 9566 25-50 | info@habrama.de

www.habrama.de

© HABRAMA 2013, Subject to change without notice. Machines depicted can contain options, accessoires and variants and are therefore not legally binding.