NEW HACO CNC PLASMA AND OXY FUEL CUTTING MACHINES

HACO CombiCut

A new Standard of cutting build for the 21th century

Buy a single flexible machine that can grow your business, yet pay for itself in a minimum time,

The CombiCut can replace several traditional individual machines in your workshop. And does the same work, only faster and more accurate by eliminating up to 80% of the material handling associated with fabricating.

The Combicut is an extremely rigid, accurate and versatile machine. The dual precision rack and pinion drive system with AC brushless Servo motors and planetary reductors assure the maximum precision of the gantry movement.

The CombiCut's gantry can accommodate multiple stations such as:

- **Plasma**
- **Oxy fuel**
- **Drilling head (up to 40 mm)**
- **Robot cutting**
- **Tube rotator**

Multiple stations can be CNC driven, or mechanical connected with the master drive.

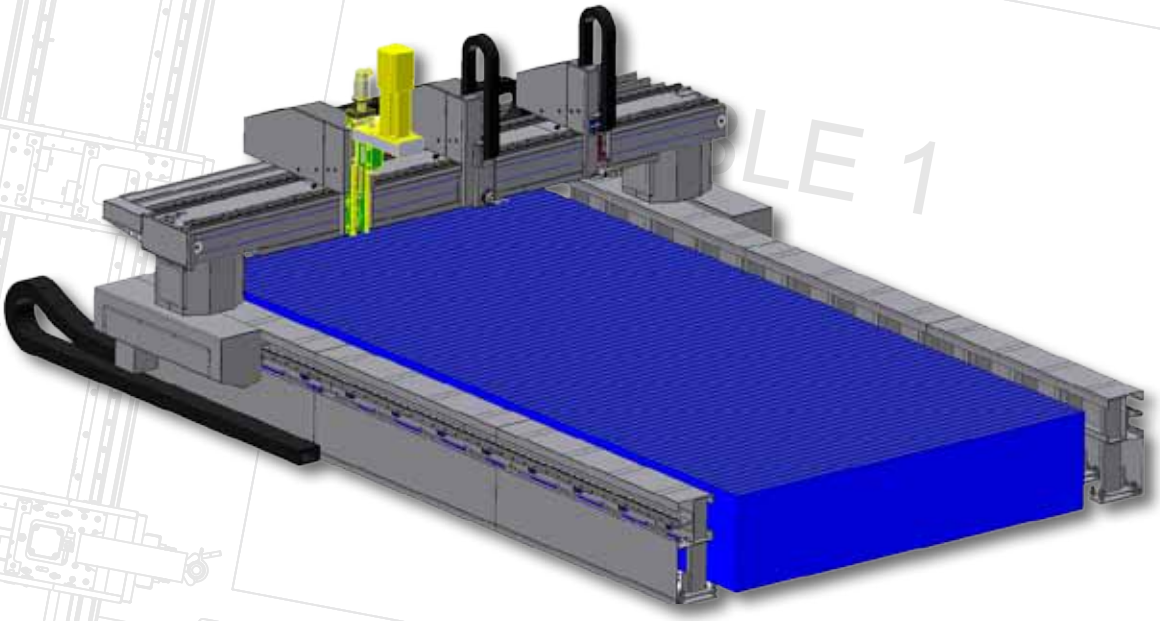

The HACO Group
Tel. +32 (0)51 26 52 00 | Fax +32 (0)51 26 52 01
hacogroup@haco.com
www.haco.com

NEW HACO CNC PLASMA AND OXY FUEL CUTTING MACHINES

Plasma Cutting

Special features of CNC

Automatic arc voltage adjustement of arc voltage over the entire life of the consumable = cut height is maintained constant over the life of consumable.

The HYPERTHERM OR KJELLBERG plasma cutting torch is mounted on the main carrier of the machine. Included is a Torch Height Control (THC) unit, monitoring the Z-axis (DC motor) for the automatic height positioning of the torch during the cutting process. During the cutting process, the THC unit measures the Arc Voltage and adjusts the Z-axis motor to maintain a constant distance from the sheet for optimum cutting results.

Traditional torch height controls require operators to periodically adjust arc voltage to ensure proper cut height. Using Haco's Techniques, the Plasma controller samples arc voltage and automatically adjust arc voltage for propper torch height over the life of the consumables without requiring operator input. Torch holder with collision protection system.

Automatic height control **WITHOUT** arc voltage sampling

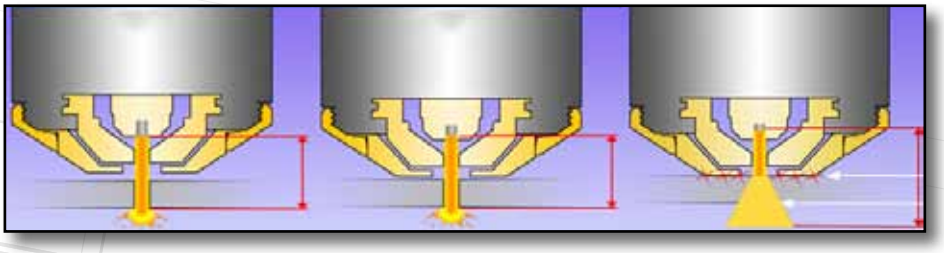

Automatic height control **WITH** Haco's arc voltage sampling

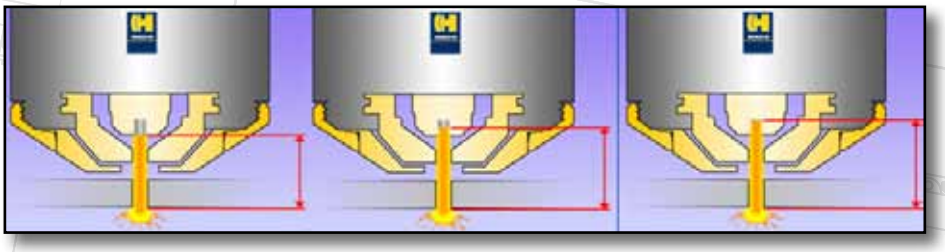

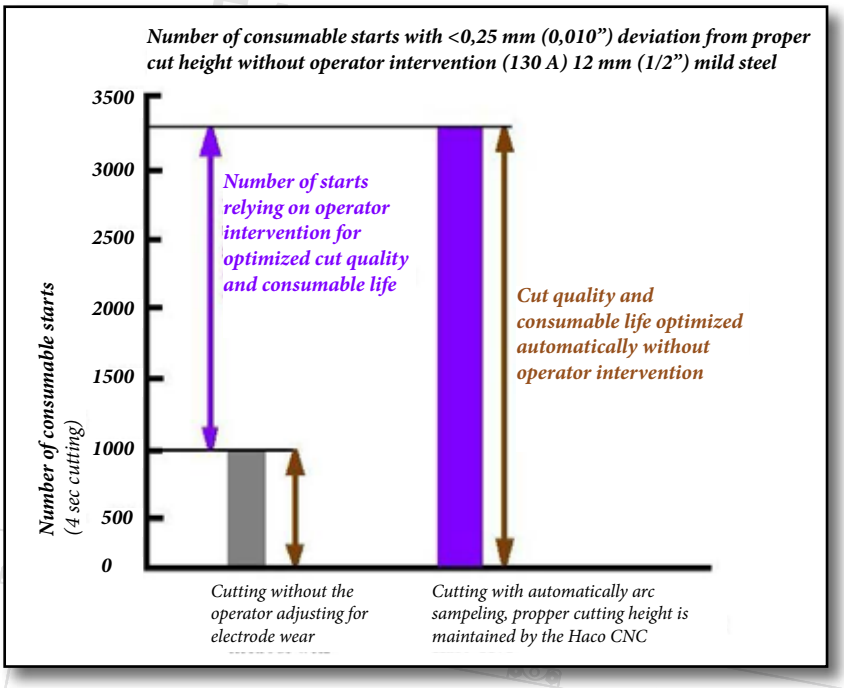

The HACO Group
Tel. +32 (0)51 26 52 00 | Fax +32 (0)51 26 52 01
hacogroup@haco.com
www.haco.com

NEW HACO CNC PLASMA AND OXY FUEL CUTTING MACHINES

Oxy Fuel Cutting

One or more oxy-fuel torches can be mechanically fixed to the main carrier.

Each oxy-fuel torch carrier has an automatic flame ignition for the torch, as well as an integrated capacitive sensor that controls the Z-axis movement (by brushless AC Servo motor) for correct setting of the cutting height.

Easy

Operator has to select only the plate thickness, Preheat time and cutting speed is automatically set by the CNC, the selection of the gasses and the pressure is automatically adjusted by the proportional gas regulators.

Oxy fuel Consumable info on Machine Controller

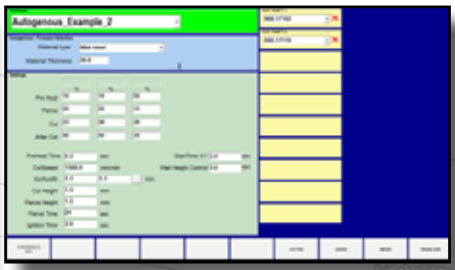

Oxy fuel cut chart

COOLEX OXY TORCH

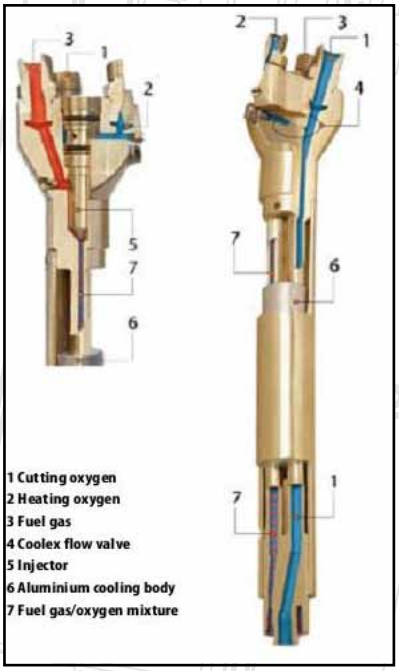

- High operation safety while hole piercing
- High service life of torch + nozzle
- High economy
- Less maintenance

Features of Machine Cutting Torch BIR+

Integrated Coolex

- The BIR+ contains a cool flow valve which provides a small amount of oxygen during preheating ofthe basic material. This small oxygen flow is streaming through the cutting oxygen channel to cool down thecomplete torch system and preventsthe reverse flow of hot gases in to thecutting nozzle. The nozzle will be protected against early contamination.
- Longer nozzlelife time
- Lower system temperature
- Max. 40 “C at mixing system
- Constant flow channels
- Constant gasflows

Safety Injector

A safety injector covered in a stable brass body isthe basis for a safe function. Any overheating will be transported away from the injector wh ich protects the torch against sustained backfire.

Downstream of the injector an aluminium cooling un it completesthe cooling function of the BIR torch which guarantees high operation safety. Sustained I backfire is practically impossible, also during extremely high load.

The HACO Group
Tel. +32 (0)51 26 52 00 | Fax +32 (0)51 26 52 01
hacogroup@haco.com
www.haco.com

NEW HACO CNC PLASMA AND OXY FUEL CUTTING MACHINES

Robot cutting

The CombiCut robot system offers a unique combination of machine and robot. This system is used for plasma cutting in 3D with assistance from a robot arm.

The standard CombiCut exists out of a plasma table with on the gantry a robot.

CombiCut work pieces can be used in several industries such as:

- General Steel construction
- Offshore
- Shipbuilding
- Machine -and crane construction
- Special 3D-pieces
- tank (dome) building

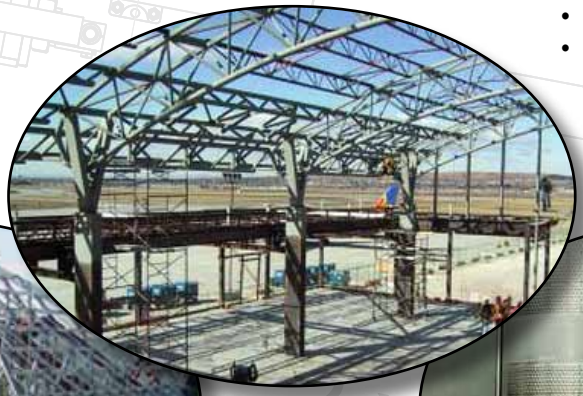

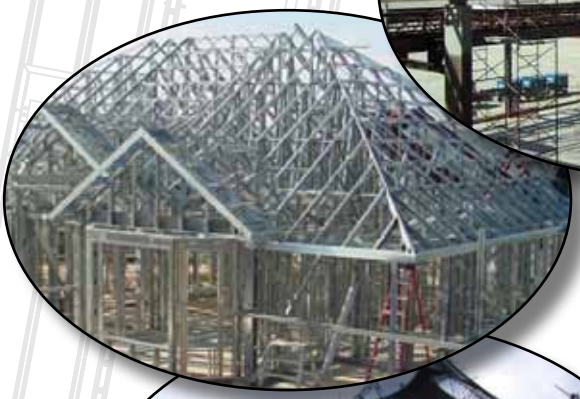

The HACO Group
Tel. +32 (0)51 26 52 00 | Fax +32 (0)51 26 52 01

hacogroup@haco.com
www.haco.com

NEW HACO CNC PLASMA AND OXY FUEL CUTTING MACHINES

Specific CombiCut operations:

1) Classical plasma cutting:

In this case the CombiCut system is used for classical cutting of a plate i.o.w. positioning in X/Y and perpendicular on the plate. All functions from the classic plasma cutting remain possible.

2) Expansion classic plasma cutting: FLAT PLATE BEVEL

- Cut height adjust by robot
- Bevel cutting
- Fixed bevel in different directions
- Fixed bevel along curve
- Variable bevel
- K-Bevel
- V-Bevel

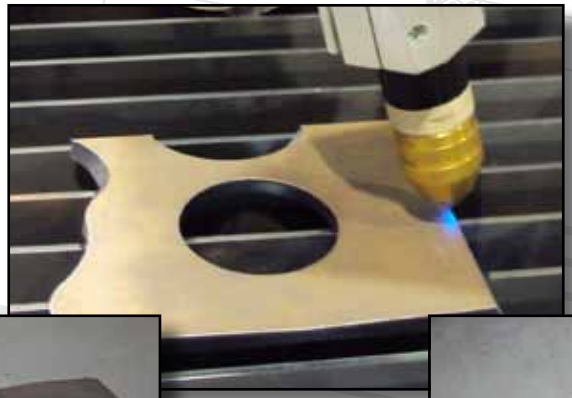

The HACO Group
Tel. +32 (0)51 26 52 00 | Fax +32 (0)51 26 52 01
hacogroup@haco.com
www.haco.com

NEW HACO CNC PLASMA AND OXY FUEL CUTTING MACHINES

3) Expansion classic plasma cutting: Marking

- Marking
- Placing of text and logo's

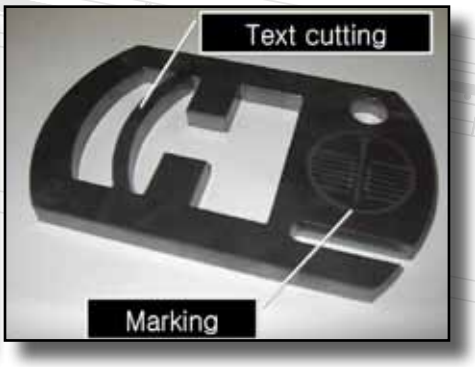

4) Expansion classic plasma cutting : Flat plate cutoff (straight or beveled) with welding cutout

- For rectangular tube
- For conical shape
- For round tube

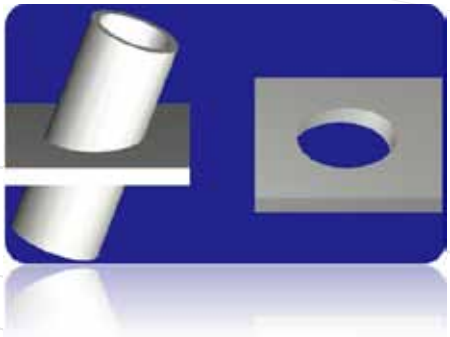

5) Expansion classic plasmacutting: Tubes (Round / Rectangular)

- Cutting holes in random shape (straight or beveled)
- Cut to length
- Marking text on all planes
- Fittings for round/rectangular tube

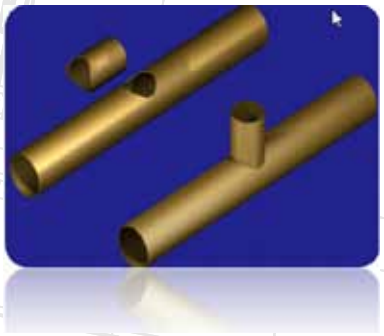

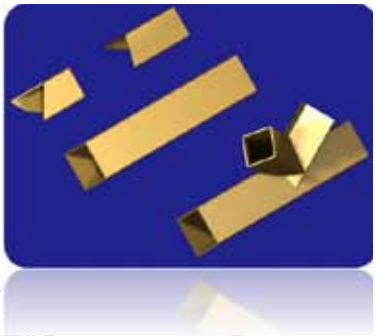

The HACO Group
Tel. +32 (0)51 26 52 00 | Fax +32 (0)51 26 52 01
hacogroup@haco.com
www.haco.com

NEW HACO CNC PLASMA AND OXY FUEL CUTTING MACHINES

6) Expansion classic plasmacutting: profiles L-,T-& I- Profiles

- Cutting holes into planes without repositioning of the profile
- Cutoff with a specific bevel
- Web notch
- Cope
- Flange notch
- Beam splitting
- Miter and cut-to-length
- Flush with web cut

7) Nesting profiles

Possible to nest all tubes and profiles:

* No matter what shape
* With holes, random cutouts, chamfer ...

The goal of nesting: to get all the workpieces out of an as short possible tube/profile.
Minimize the waste material.

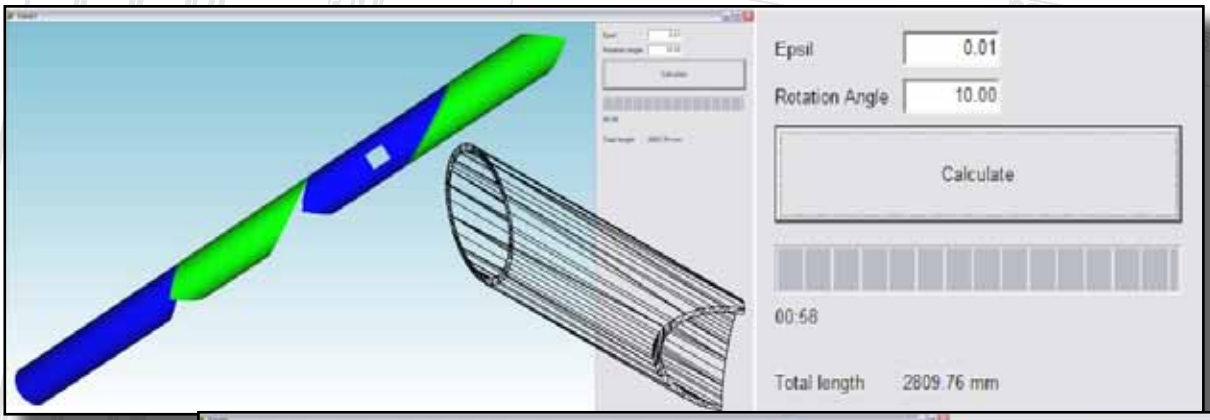

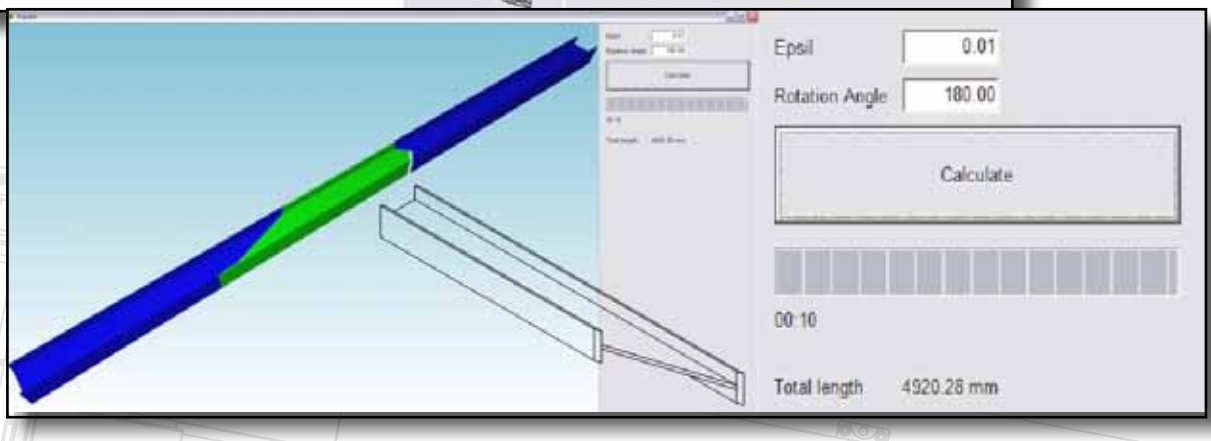

NEW HACO CNC PLASMA AND OXY FUEL CUTTING MACHINES

Revolutionary Programming software

Programming a " traditional " robot is time consuming and not easy. To avoid this issue Haco has developed a Revolutionary easy to use Graphical programming software "ROBOCUTTING STUDIO"

For several decades, robots are taking their place in the industrial world.

But there's no good working robot without a perfect link between robot and human. The perfect solution is RoboStudio.
RoboStudio is software especially created for interaction between human and robot. It is an offline-software package for the creation and simulation of robot trajectories.

All kinds of operations can be created, such as pick-and-place operations, machining, welding, riveting, loading/ unloading, painting, assembly, bending, etc. Multiple robots can be assigned into a production cell.

Starting from 3D-CAD data, a virtual representation of the robot environment can be created, guarenteeing high-detailed simulations of the robot process.
Included the vast librabry of 3D-objects, it's possible to create a complete virtual robot cell.
This library contains multiple robot types, tools, peripheral objects, etc.
RoboStudio supports various formats for trajectory import: DXF, IGES, ISO, Val3, etc.

Trajectories can be created from scrath, using one of a range of methods. There is no limit to the number of trajectory points.

There are also several options that can be activated during the creation of the trajectory, for example the software can take all limits in account or it is possible to choose whether an object should be taken into account for the collision detection or not. It could also be practical to simplify the trajectory by reducing the number of points.
After creating the trajectory, a program is made. Now the program must be send to the control and from now on, only the robot has the hardest work to do. From importing a 3D drawing to generate the Robot program in a few minutes.

Imported 3D drawing

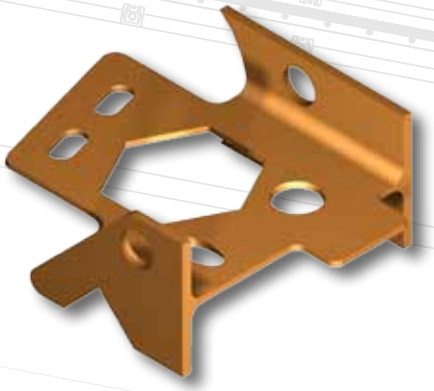

RoboCutting Studio is automatically generating the robot cutting path

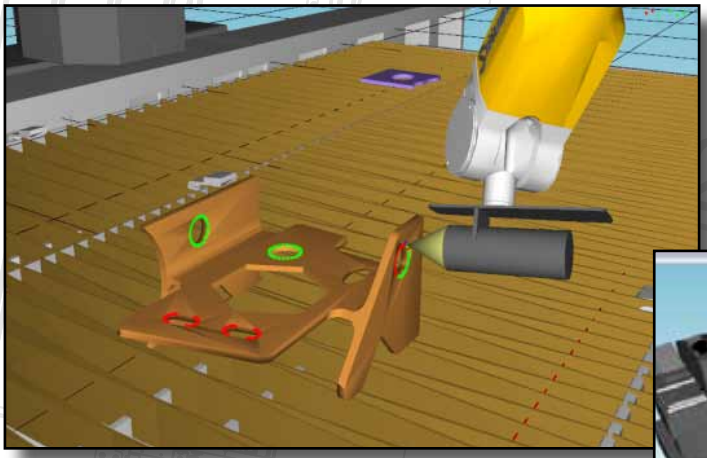

RoboCutting Studio Graphical simulation

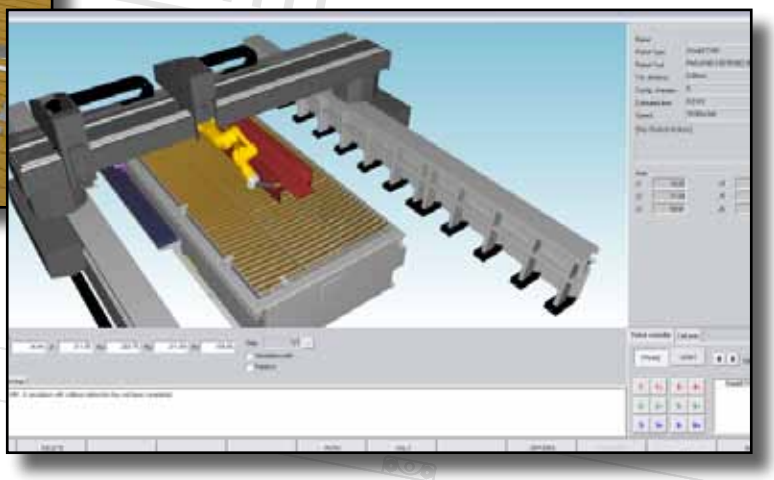

The HACO Group
Tel. +32 (0)51 26 52 00 | Fax +32 (0)51 26 52 01
hacogroup@haco.com
www.haco.com

NEW HACO CNC PLASMA AND OXY FUEL CUTTING MACHINES

Cutting the part on the CombiCut

Final part

Drilling and Tube Rotator

The Combicut can be also equipped with a drilling unit up to 40mm and Tube Rotator.

Plasma sources

Haco is using Hypertherm and Kjellberg plasma sources in, known as the best plasma systems available on the market.
To Improve the hole quality and cutting precision, technologies such as True Hole and Contour Cut are 100% implemented in our offline -and CNC software.

Brochures HPR and Kjellberg

Brochure-Plasma-Cutting-Systems-HiFocus-280i-360i-440i.pdf

Brochure ENG_HPR XD FAMILY BROCHURE.pdf

True Hole Technology.pdf

Contour Cut.pdf

The HACO Group
Tel. +32 (0)51 26 52 00 | Fax +32 (0)51 26 52 01

hacogroup@haco.com
www.haco.com