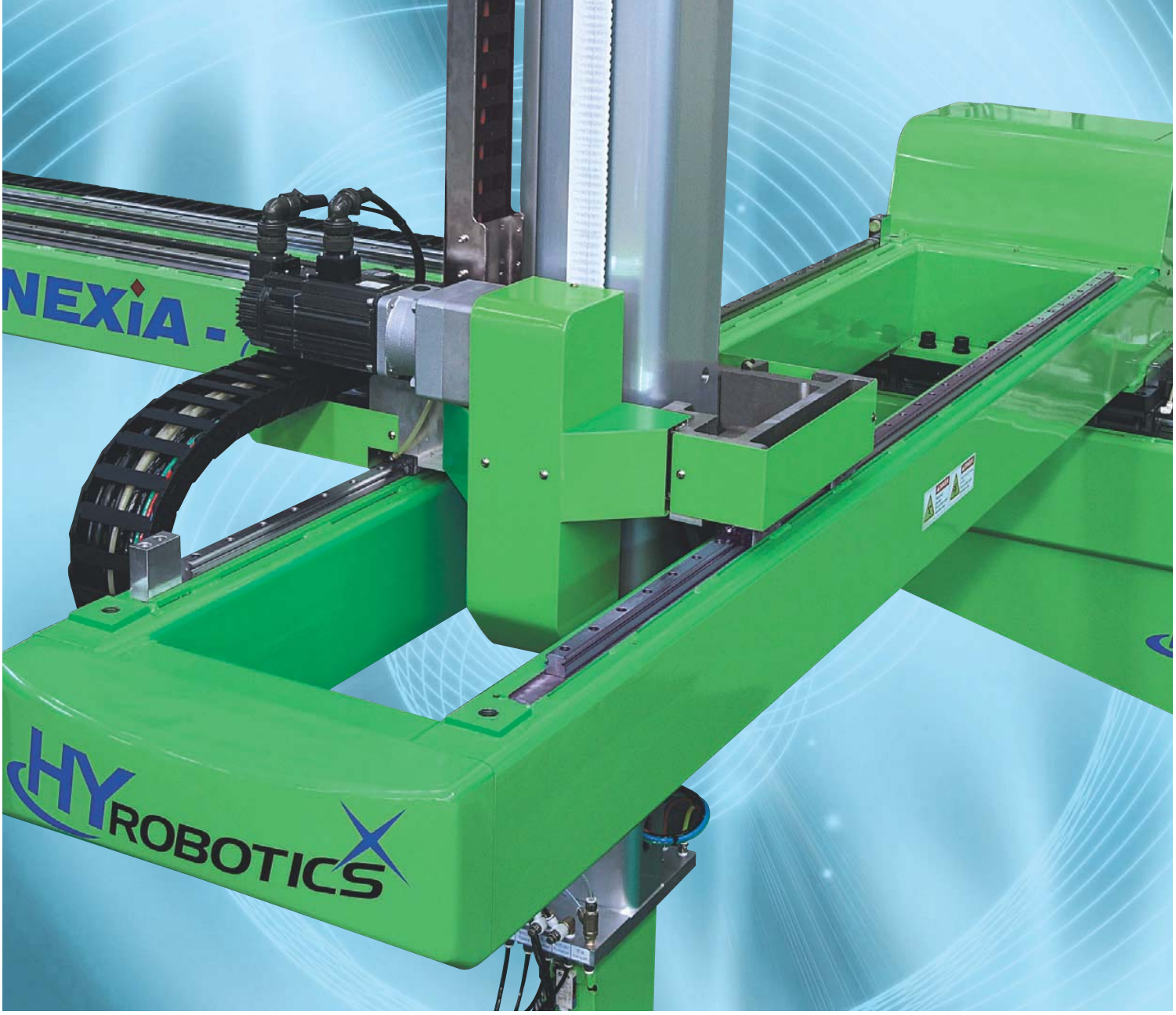

ISO 9001:2000

Parallel Type Traverse Robot - Optimize Plant Layout

NEXiA-CT Series

NEXIA-200SYCT ~ 3000SYCT

HYROBOTICS

NEXiA-CT Series

Optimize Plant layout with NEXIA Parallel type robot

◆Features

- IMM: 100~4000Ton
- Servo Axis : 3 ~ 6 Axis
- Motion Guide : High strength LM Guide
- Amr Support : Double Side Support
- Up/Down Arm : Telescopic
- Main Controller : Body Attached

◆Standard Programming

1) Single or Double Arm
2) Suction (Use, No use)
3) Chuck (Use, No Use)
4) Gripper (Use , No Use)
5) 4 Basic Position
6) 4-1 Waiting Position
7) 4-2 Take Out Position
8) 4-3 Rotation Position
9) 4-4 Release Position (Stacking)
10) Addtional Positon upto 80 steps
11) Additional Motion (Valve on, off)
12) User Output (On , Off)
13) User Input Waiting
14) Ejector Forward / Backward Control
15) J- Motion in mold
16) Body Attached Shot Counter
17) Ethernet Communication (Option)

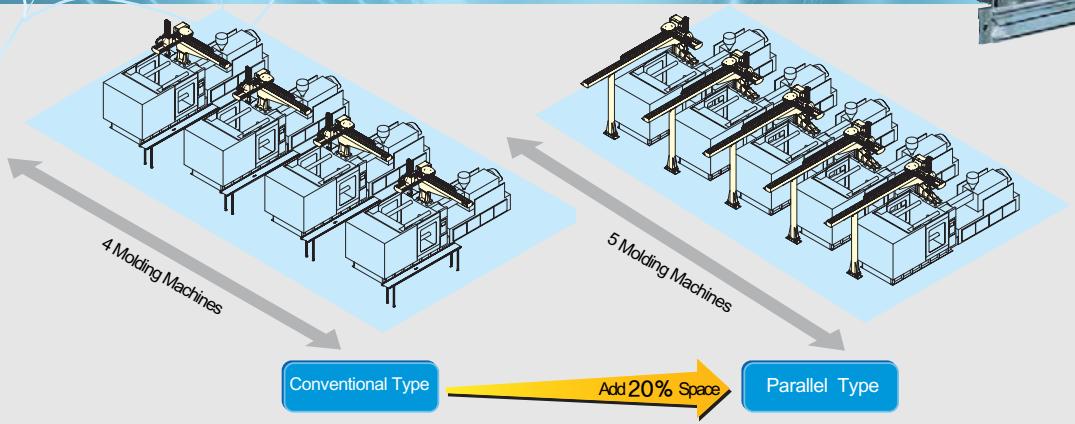

◆5.7″ Touch Controller

- 5.7″ Touch Screen and LCD with egnomic design plastics cover case
- 256 Color Windows / Icon based control panel offer simple but flexible automation .

◆.Controller Description

1) Manual, Mold Manager, Automatic Screen
2) Step forward, Jog Forward, 1 Cycle

DIMENSION

Unit : mm

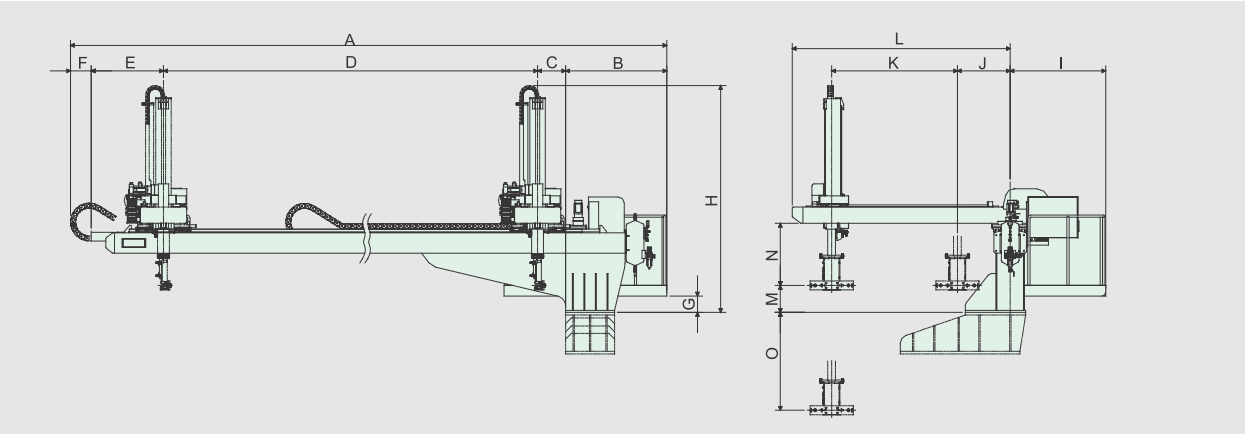

MODEL	A	B	C	D	E	F	G	H	I	J	K	L	M	N	O
NEXIA-200SYCT	(4412)	645	100	(3300)	367	–	250	1318	656	205	650	1135	300	230	500
NEXIA-400SYCT	(4812)	695	150	(3600)	367	–	250	1477	656	205	950	1435	138	392	962
NEXIA-600SYCT	(5455)	935	200	(4000)	320	–	284	1798	681	275	1085	1627	178	454	1122
NEXIA-800SYCT	(6970)	1140	220	(5000)	400	210	414	2078	706	348	1140	1780	200	550	1400
NEXIA-1300SYCT	(8033)	1153	250	(6000)	420	210	135	2466	949	405	1572	2293	179	748	1621
NEXIA-2000SYCT	(9395)	1245	250	(7000)	700	200	160	2781	1175	556	1710	2676	300	792	1800
NEXIA-2500SYCT	(10645)	1245	350	(8000)	800	250	180	3009	1225	616	1920	2977	325	775	2175
NEXIA-3000SYCT	(10728)	1250	400	(8000)	828	250	230	3549	1275	747	2250	3605	417	843	2583

* ( ) Dimension can be changed due to IMM machine dimension
* Subject to change without any notice for quality improvements

Specification

Power	Operation	Control	Air Pressure	Max Air Pressure	Chuck Rotation
AC220V (50/60Hz)	AC Servo Motor	MICOM	6 kgf/cm²	8 kgf/cm²	90˚

	Traverse Stroke (mm)	Descent Stroke (mm)	Forward Stroke (mm)	Electric Power	Air Consume [ℓ(normal)/Cycle]	Payload (With EOAT)
NEXIA-200SYCT	3300	800 (950)	650	AC 220V 10A(Max)	7	5kgf
NEXIA-400SYCT	3600	1100 (1300)	950	AC 220V 10A(Max)	7	5kgf
NEXIA-600SYCT	4000	1300 (1600)	1085	AC 220V 10A(Max)	16	10kgf
NEXIA-800SYCT	5000	1600 (1800)	1140	AC 220V 11A(Max)	22	15kgf
NEXIA-1300SYCT	6000	1800 (2100)	1572	3 Phase AC 220V 12A(Max)	35	20kgf
NEXIA-2000SYCT	7000	2100 (2500)	1710	3Phase AC 220V 12A(Max)	54	40kgf
NEXIA-2500SYCT	8000	2500 (3000)	1920	3 Phase AC 220V 17A(Max)	92	50kgf
NEXIA-3000SYCT	8000	3000 (3500)	2250	3 Phase AC 220V 19A(Max)	100	80kgf

★( ) model is extended

Factory : Incheon South Korea
TEL : 032-582-5040, 032-582-5046
FAX : 032-584-7040
www.hyrobot.com

HYROBOTICS CORP.
5988 Mid Rivers Mall Dr.
Saint Louis, MO 63304 USA
TEL : 1-636-578-6059
FAX : 1-866-232-5594
www.hyrobots.com

2009. 02