Walkie Reach, Straddle, Counterbalance Stackers

W20-30ZR
W20-30ZA$_2$
W40ZA
W25-40ZC

HYSTER

The *Safe* Choice

Walkie Stacker Series

The Walkie Reach, Straddle, or Counterbalance Stacker series can handle dock-to-stock and everything in between. The Hyster Walkie Stacker product line's advantageous head-length and multi-function, bottom mounted steering control handle gives you incredible load handling control with excellent maneuverability. The standard creep speed or "turtle" speed feature can take your operator's materials handling capabilities to their full potential.

With the industry's popular overall widths (OAW) and open-end-clearance (OEC) dimensions available, you're sure to be able to configure the straddle chassis design of the W20-30ZR Reach and W25-30ZA$_2$/W40ZA Straddle series to match your most demanding operational requirements.

W20-30ZR

W20-30ZA$_2$/W40ZA

W25-40ZC

W20-30ZR Walkie Reach Stacker Options include:

- Cooler/Freezer Construction
- Battery Rollers (both side exit)
- 10" x 5" Poly Siped Drive Tire
- BDI w/Hour Meter and Fault Light
- Various VISTA® Mast Configurations
- 35.0" OEC / 43.0" OAW
- 37.0" OEC / 45.0" OAW
- 41.0" OEC / 49.0" OAW
- 43.0" OEC / 51.0" OAW
- 49.0" OEC / 57.0" OAW
- Toggle Ignition Switch
- Lexan Mast Shield
- Integral Sideshift
- Convenience Tray **
- Backup Alarm Kit
- Strobe Light Kit

W20-30ZA$_2$/W40ZA Walkie Straddle Stacker Options include:

- Cooler/Freezer Construction
- 33" x 9" Open Top Battery Compartment (N/A W25ZA$_2$)
- Battery Rollers (both side exit) (N/A W25-30ZA$_2$)
- 10" x 5" Rubber Drive Tire (W40ZA only)
- BDI w/Hour Meter and Fault Light
- Various Mast Configurations
- Tandem Polyurethane Load Wheels
- 37.0" OEC / 45.0" OAW
- 43.0" OEC / 51.0" OAW (N/A W25ZA$_2$)
- 49.0" OEC / 57.0" OAW
- 34.0" Wide Hang-On Sideshift
- Toggle Ignition Switch
- Lexan Mast Shield
- Convenience Tray **
- Backup Alarm Kit
- Strobe Light Kit

W25-40ZC Walkie Counterbalance Stacker Options include:

- Cooler/Freezer Construction
- Battery Rollers (both side exit)
- 10" x 5" Siped Poly Drive Tire
- BDI w/Hour Meter and Fault Light
- Various Mast Configurations
- Toggle Ignition Switch
- Convenience Tray **
- 34.0" Wide Hang-On Sideshift
- Backup Alarm Kit
- Strobe Light Kit

*** Convenience tray requires the 13.0" battery compartment.*

HYSTER
HYSTER

Do more in less warehouse space, in less time, with the perfect multi-purpose heavy-duty performers.

Whether your material handling jobs include unloading or loading trailers, dockside maneuvering, production-line feeding, put-aways or let-downs, the Hyster Walkie Stacker product line gives you a big capacity for work cycles handling palletized loads, at the operational cost of a Walkie rather than a Rider truck.

High Performance

- The Walkie Stacker product line's high performance, energy efficient hydraulic system's low noise, series wound motor provides you fully featherable control of lift and lower functions. And the system's translucent hydraulic tank provides quick, easy hydraulic oil level checks – to help ensure daily checks are completed.
- The W20-30ZR Reach, W25-30ZA$_2$/W40ZA Straddle, and the W25-40ZC Counterbalance Stacker series are equipped with a Metal Oxide Semiconductor Field Effect Transistor (MOSFET) traction controller and Separately Excited Motor (SEM). Together they provide you enhanced battery shift life, and improved acceleration with higher top-end travels speeds when loaded.
- Bottom mounted steering control handle's ergonomic, easy-to operate, finger tip control of proportional lift/lower, reach extension/retraction (W20-30ZR only), travel speed and direction, and an optional sideshift makes load handling easier and more precise, increasing your productivity.
- The creep or "turtle" speed button, located conveniently on the bottom-side of the handle allows you to maneuver the ZR-Reach, ZA-Straddle, or the ZC-Counterbalance Stacker series in and out of tight areas, with the steer handle in the upright position.

Selectable Performance Modes

Each series' Three Operator Selectable Performance Modes allow you to choose between three preset user configurations that affect acceleration, deceleration (neutral braking), and top travel speed. Now, customizing your Hyster Walkie Stacker product line's performance to your application is easier than ever.

Three Operator Selectable Performance Modes

MODE 1: Economy Mode (battery saver)
Soft acceleration; reduced top travel speed with the Auto Deceleration adjusted to high level.

MODE 2: Performance with Auto Deceleration
Medium acceleration; reduced top travel speed with the Auto Deceleration adjusted to high level.

MODE 3: Performance with Minimum Auto Deceleration
High acceleration; high top travel speed with the Auto Deceleration adjusted to minimum level.

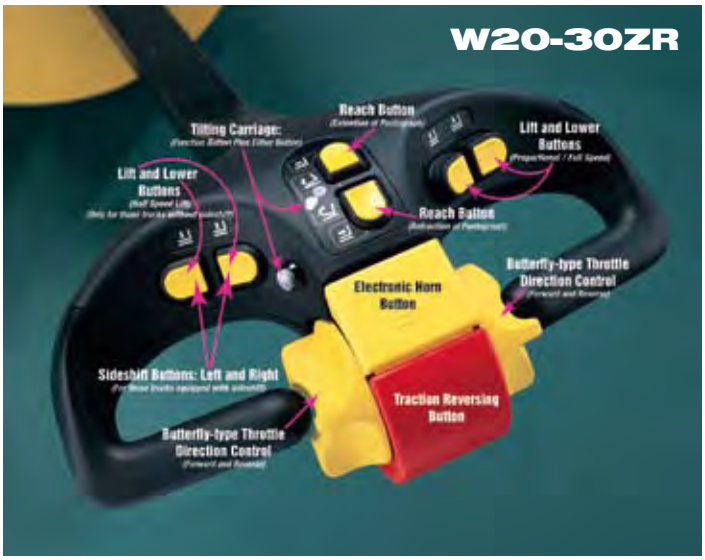

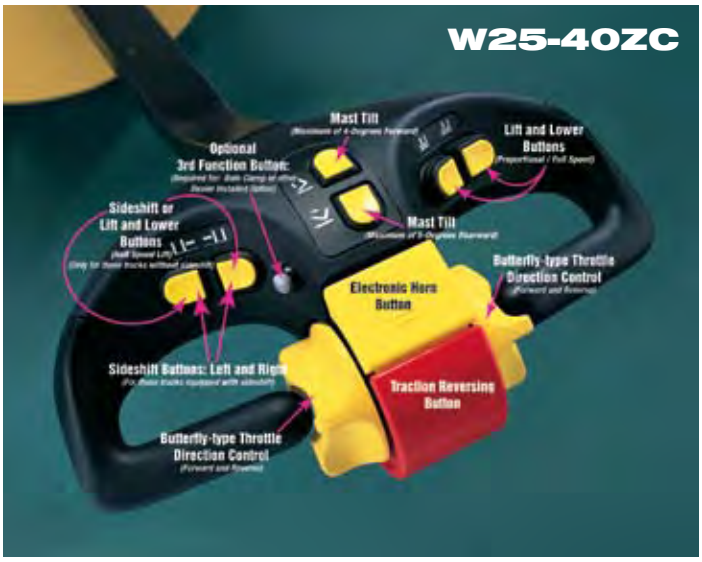

DEPENDABILITY

The heavy-duty Walkie Stacker series features a tough, unitized construction that is robotically welded, for superior reliability.

Designed to utilize 24-volt industrial batteries, you can select up to a 510 amp hour battery to better match truck usage to your operational needs. The truck's battery is accessible from both sides.

- Infused with over 70 years of experience, the Hyster Walkie Stacker product line has 25 percent fewer parts, fewer electrical connections, fused traction and hoist motors, solid-state pump control, integral battery state-of-charge and lift interrupt.
- Class H insulation and premium brushes provide excellent thermal protection to the stationary mounted motor drive unit (MDU) with gear mesh optimizing integrated motor pinion.
- MDU mounting eliminates power cable tension and flex, increasing life.
- An electronically released, mechanically applied brake on top of the traction motor affords you easy daily checks to maximize uptime.
- The drive axle's string guard minimizes axle exposure to foreign objects, significantly lengthening life.
- Our legendary mast's chrome plated cylinder rods resist scoring and corrosion, while high pressure seals and rod wipers keep contaminants out, significantly extending service life. Side-thrust adjustment is simple and can be accomplished without special tools, disassembly or removal of the mast.

Frame mounting our legendary masts gives the rigidity and confidence you need to handle capacity loads at the 4th-shelf height position. Simplified internal hose routings and the hydraulic manifold's design significantly increases reliability. Best of all, the routings and manifold design reduces the number of connections on the W20-30ZR Reach series' pantograph mechanism, maximizing your uptime.

The Hyster Walkie Stacker product line features a resilient high impact thermoplastic cowl cover, a tough unitized frame, a reliable powertrain design, and an interlocking channeled I-beam mast and that's not all. With lift heights over 14-feet, a bottom mounted steering control handle, compact head length, and a 24-volt electrical system – these heavy-duty Walkie Stackers deliver efficient, reliable, high performance productivity all at a lower cost than you think.

Hyster Company takes it to the max, when it comes to uptime and your ROI.

Standing up to the rigors of your daily operations takes a great lift truck. Serviceability... now, there's the true test of a stacker truck. Complexity and accessibility can turn unscheduled downtime into a service nightmare and cost more than you bargained - not a problem with the ZR, ZA, or ZC series.

- An optional multi-function display (standard on W25-30ZA$_2$) affords you performance-at-a-glance of the battery state-of charge with four high intensity LED lights. The display also provides you the truck hours, fault code indication and lift interrupt warning.
- Truck diagnostic information can be read using a hand-held programming tool (optional) or by checking the status of the LED indicator mounted on the controller. And all wiring is tagged for quick, easy circuit tracing.
- Optional battery rollers and easily removed side gates are available to help maximize your uptime and facilitate quick, easy battery change outs.
- The W20-30ZR and W25-30ZA$_2$/W40ZA series' 'knock-out' load wheel axles afford you quick and easy maintenance and replacement.

LOWER COST OF OPERATIONS

With the W20-30ZR Reach, the W25-30ZA$_2$/W40ZA Straddle, and the W25-40ZC Counterbalance, you get the best of both worlds: you pay for a heavy-duty machine *and* get a heavyweight by performance standards. Improve your space utilization and productivity while driving down your cost of operations. These heavy-duty performers make short work of palletized loads in narrow aisles, congested areas, and under mezzanines. The W20-30ZR Reach, W25-30ZA$_2$/W40ZA Straddle, and the W25-40ZC Counterbalance series' deliver the work ethic you need, even when operating where floor-loading capacities are limited.

- The ZR series Walkie Stacker gives you a cost-conscious advantage in load handling versatility over your competition, with its proven VISTA® mast and pantograph reach mechanism. It delivers a full 24 inches of powerful reach that enables you to handle up to 3,000 lbs. at full extension and to shelf heights greater than 14 feet. The pantograph also helps conserve your valuable floor space, via block stacking pallets with very little distance in between them, for more cost-effective utilization of your existing space.
- The close-toe base arms and load wheel assemblies of the W20-30ZR and W25-30ZA$_2$/W40ZA series' deliver rock-solid stability whether you're cornering, traveling, lifting or lowering, traveling over rough floors, and even dock plates. The close-toe load arm enclosures also guard against debris or damage caused from foreign objects.

- The industry's most common overall base-arm widths and open-end clearances available on the W20-30ZR and the W25-30ZA$_2$/W40ZA, so you can make quick, easy work of any palletized loads.
- Capable of handling a variety of pallet and load sizes when moving materials from dock-to-stock.
- Our legendary 2-stage Limited Free-Lift (LFL) or 3-stage Full Free-Lift (FFL) mast configurations give you the rigidity and durability you need for reaching the fourth shelf height position at 14 feet and above.
- Energy savings of adjustable plugging and the Auto Deceleration System along with a significant increase in traction motor brush life.
- Serial communications and solid state switches with soldered wire connections increasing reliability and uptime, replace the hydraulic pump contactor, forward and reverse contactors and their corresponding maintenance costs.

Precise Operation

- The W25-40ZC Counterbalance Stacker series' 32-inch chassis width along with its ergonomic bottom mounted steering control handle gives you excellent maneuverability unloading or loading trailers, production-line feeding, put-aways, let-downs and works well in other congested areas with ease and efficiency.
- The Walkie Stacker product line's truck functions are only a fingertips' touch away, including mast tilt, the optional sideshift, the creep or "turtle" speed, and the pantograph extension or retraction on the W20-30ZR Reach series.
- The Hyster Walkie Stacker product line is equipped with rear mounted, dual lift cylinders to optimize your "window" of visibility when operating them in the forks-first direction.

The W20-30ZR series' standard 33.75-inch carriage allows for the use of standard hook-type forks. In addition, an optional integral sideshift carriage is available. With it, you now get 7.0 inches of total sideshift for even more accurate palletized load placement. And you'll love how the 48-inch load backrest moves with the load when you use fork tilt, sideshift, reach or retract – giving you an excellent visual reference point at the fourth shelf position.

HYSTER
HYSTER
B-762
RECEIVED

W20-30ZR DIMENSIONS

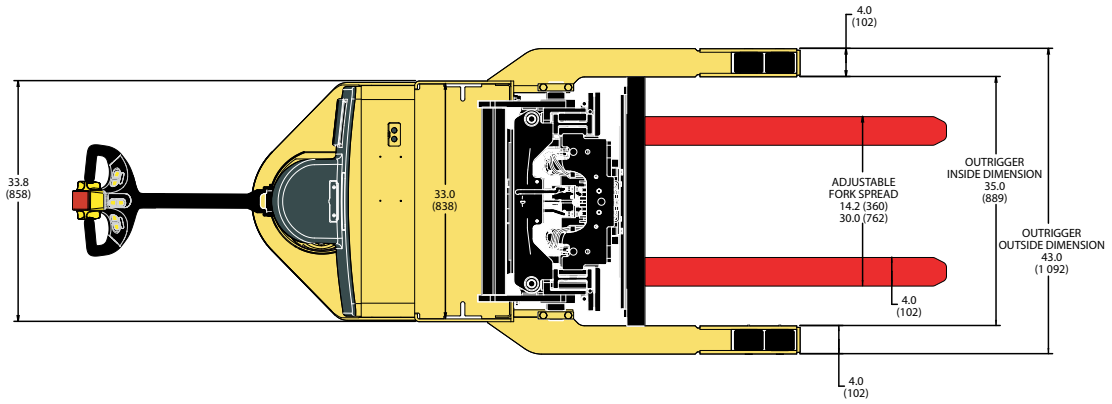

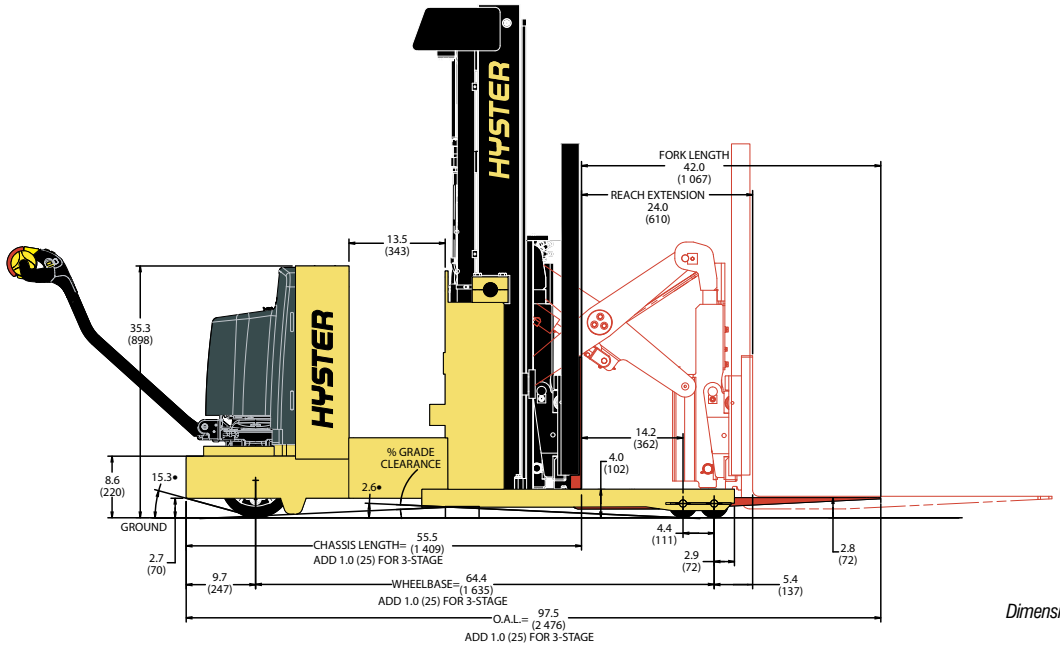

Dimensions are in inches (millimeters).

W20-30ZR MAST DIMENSIONS

Maximum Fork Height (TOF) †	Overall Lowered Height	Overall Extended Height		*Free-Lift (TOF)	Mast Weight
		w/Load Backrest	w/o Load Backrest	w/o Load Backrest	
in. (mm)	in. (mm)	in. (mm)	in. (mm)	in. (mm)	lbs. (kg)
2-STAGE LIMITED FREE-LIFT (LFL) VISTA® MAST					
101.0 (2,565)	72.0 (1,829)	149.0 (3,785)	121.5 (3,086)	6.5 (165)	1,660 (753)
111.0 (2,819)	77.0 (1,956)	159.0 (4,039)	131.5 (3,340)	6.5 (165)	1,725 (782)
123.0 (3,124)	83.0 (2,108)	171.0 (4,343)	143.5 (3,645)	6.5 (165)	1,800 (816)
141.0 (3,581)	92.0 (2,337)	189.0 (4,801)	161.5 (4,102)	6.5 (165)	1,925 (873)
3-STAGE FULL FREE-LIFT (FFL) VISTA® MAST					
149.0 (3,810)	73.0 (1,854)	197.0 (5,004)	169.5 (4,305)	50.0 (1,270)	2,025 (919)
164.0 (4,166)	78.0 (1,956)	212.0 (5,385)	184.5 (4,686)	55.0 (1,397)	2,130 (966)
179.0 (4,547)	83.0 (2,108)	227.0 (5,766)	199.5 (5,067)	60.0 (1,524)	2,250 (1,021)

† Lift heights over 123.0" (3,124 mm) (W30ZR) maximum fork height require reduced capacity or restricted back tilt. Lift heights over 141.0" (3,581 mm) (W20ZR) may require reduced capacity or restricted back tilt. Contact Applications Engineering if this measurement is critical.

* If load backrest extension is used on 3-stage FFL, add 27.5" (699 mm).

W20-30ZR BATTERY AND COMPARTMENT SPECIFICATIONS

Number Of Cells	Cell Size	Plates Per Cell	Capacity Amp-Hours	Kwh	"X" Dimension	"Y" Dimension	"Z" Dimension	Weight
12	75	11	375	8.7	26.5	13.0	23.3	825 lbs.
12	85	11	425	9.9	26.1	12.8	23.3	865 lbs.
12	75	13	450	10.5	30.9	13.0	23.3	987 lbs.
12	85	13	510	11.9	30.9	13.0	23.3	1,035 lbs.

NOTES:
(1) Steel tray with cover required for all batteries.
(2) Battery connector type 175 Red (Gray is optional).
(3) Cable lead position "B".
(4) 20" cable length.
(5) Maximum cable gauge of 1/0.
(6) Battery well: 33" x 13.5" x open

GENERAL	1	Manufacturer		**Hyster Company**	**Hyster Company**
	2	Model		W20ZR	W30ZR
	3	Capacity, rated	lb. (kg)	2,000 (910)	3,000 (1,360)
	4	Load center	in. (mm)	24 (610)	24 (610)
	5	Power type		24V - Electric	24V - Electric
	6	Operator type		Pedestrian	Pedestrian
	7	Tire type, cushion, solid, pneumatic, etc.		Cushion	Cushion
	8	Wheels, drive / load		1 / 4	1 / 4
DIMENSIONS	10	2-stg. limited free lift (LFL) (TOF)	in. (mm)	123.0 (3,124)	123.0 (3,124)
	11	Standard Free-lift (TOF)	in. (mm)	6.5 (165)	6.5 (165)
	12	Maximum Carriage Width	in. (mm)	32.5 (825)	32.5 (825)
	13	Forks, width / thickness / length	in. (mm)	4.0 (100) / 1.5 (40) / 42.0 (1,067)	4.0 (100) / 1.5 (40) / 42.0 (1,067)
	14	Fork Spread (Outside Dimensions)	in. (mm)	30.0 (762)	30.0 (762)
	15	Tilt of Mast - Forward / Backward	degrees	3 / 4	3 / 4
	16	Length to face of forks	in. (mm)	55.5 (1,409)	55.5 (1,409)
	17	Overall Width (Standard Tires)	min / max	35.0 (889) to 49.0 (1,245)	35.0 (889) to 49.0 (1,245)
	18	Lowered Overall Height (LOH)	in. (mm)	83.0 (2,108)	83.0 (2,108)
	19	Maximum Fork Height (MFH)	in. (mm)	123.0 (3,124)	123.0 (3,124)
	21	Turning radius, minimum outside	in. (mm)	74.2 (1,885)	74.2 (1,885)
	22	Overhang, end of outrigger to face of forks	in. (mm)	2.6 (66)	2.6 (66)
	23	90° stack aisle (add load length)	in. (mm)	SEE CHART	SEE CHART
	24	Equal Intersecting Aisle	in. (mm)	SEE CHART	SEE CHART
		Stability (Comply with ANSI?) *		Yes	Yes
PERFORMANCE †	25	Travel speed, No Load	mph (km/h)	3.5 (5.6)	3.5 (5.6)
		Travel speed, Rated Load	mph (km/h)	3.1 (4.9)	2.9 (4.7)
	26	Lift speed, Std. No Load	ft/min (m/s)	30.0 (0.15)	30.0 (0.15)
		Lift speed, Std. Rated Load	ft/min (m/s)	22.0 (0.11)	22.0 (0.11)
	27	Lowering speed, Std. No Load	ft/min (m/s)	43.0 (0.22)	43.0 (0.22)
		Lowering speed, Std. Rated Load	ft/min (m/s)	45.0 (0.23)	45.0 (0.23)
WT.	29	Gradeability	%	10.00	10.00
	31	Total approximate weight without battery	lb. (kg)	3,422 (1,552)	3,422 (1,552)
WHEELS & TIRES	32	Axle load, No Load drive / load	lb. (kg)	2,286 (1,037) / 1,736 (787)	2,286 (1,037) / 1,736 (787)
		Number tires drive / load		1 / 4	1 / 4
	33	Size of tire, drive	in. (mm)	10.0 x 5.0 / (254 x 127) Poly	10.0 x 5.0 / (254 x 127) Poly
	34	Size of tire, load	in. (mm)	4.0 x 2.8 / (102 x 71) Tandem Poly	4.0 x 2.8 / (102 x 71) Tandem Poly
	35	Wheelbase	in. (mm)	64.4 (1,635)	64.4 (1,635)
	37	Ground clearance, No Load lowest point	in. (mm)	0.5 (13)	0.5 (13)
	38	Ground clearance, No Load center wheelbase	in. (mm)	1.5 (38)	1.5 (38)
BATT.	41	Battery, type		Lead acid	Lead acid
	42	Battery, volts / ampere hours	V/ah	24 / 510	24 / 510
	43	Battery, minimum weight	lb. (kg)	600 (273)	600 (273)
MOTOR	44	Traction motor, 60 min. rating	hp (kw)	2.3 (1.7)	2.3 (1.7)
		Pump motor, 15 min. rating	hp (kw)	4.0 (3.0)	4.0 (3.0)
	45	Traction motor control method		Transistor	Transistor
	46	Number of speeds		Infinitely variable	Infinitely variable
	47	Relief pressure for attachments	psi (kPA)	2,900 (19,995)	2,900 (19,995)
	49	Grade Clearance	%	13.0	13.0

CERTIFICATION: These Hyster lift trucks meet design specifications of Part II ANSI B56.1-1969, as required by OSHA Section 1910.178(a)(2) and also comply with Part III ANSI B56.1-revision in effect at time of manufacture. Certification of compliance with the applicable ANSI standards appears on the lift truck.

† *NOTE: Performance specifications are for truck equipped as described under Standard Equipment in this Technical Guide. Performance specifications are affected by the condition of the vehicle and how it is equipped, as well as by the nature and condition of the operating area. Specifications are subject to change and the proposed application should be discussed with your authorized Hyster Company Dealer.*

W20-30ZR DIMENSIONS

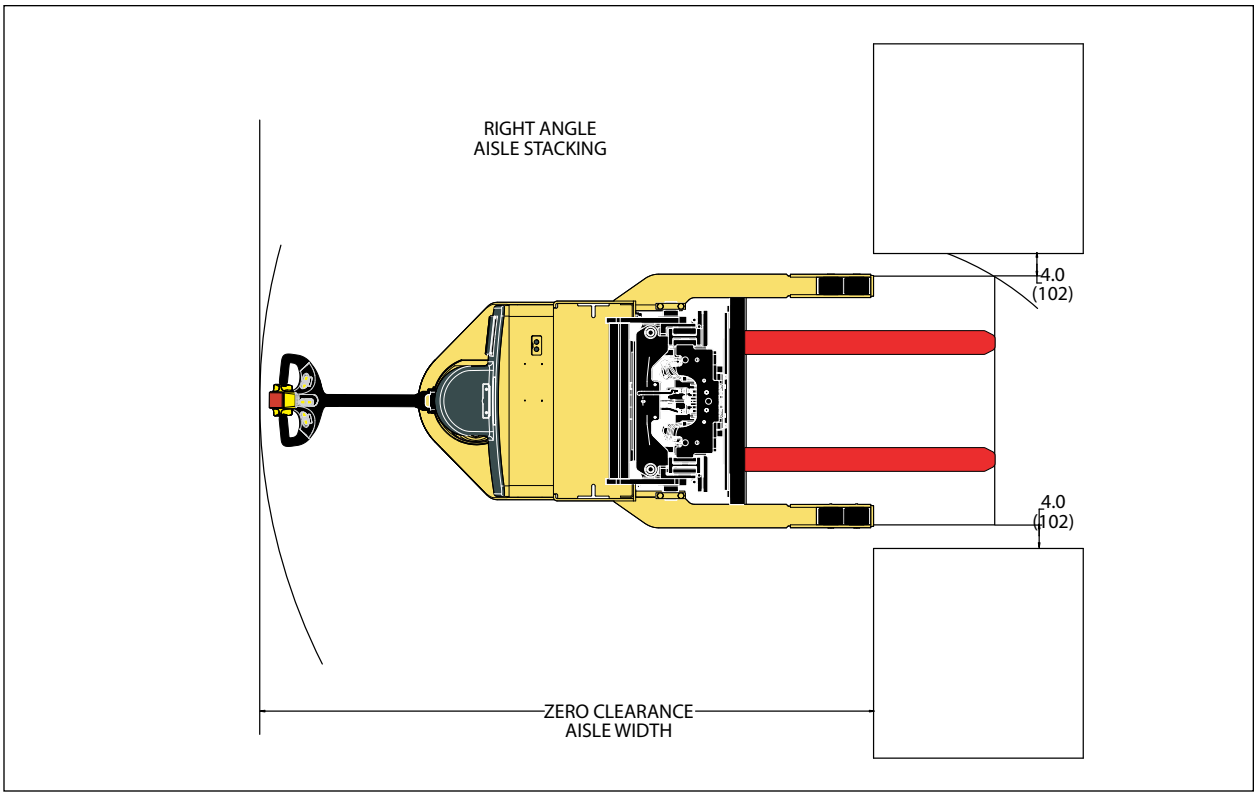

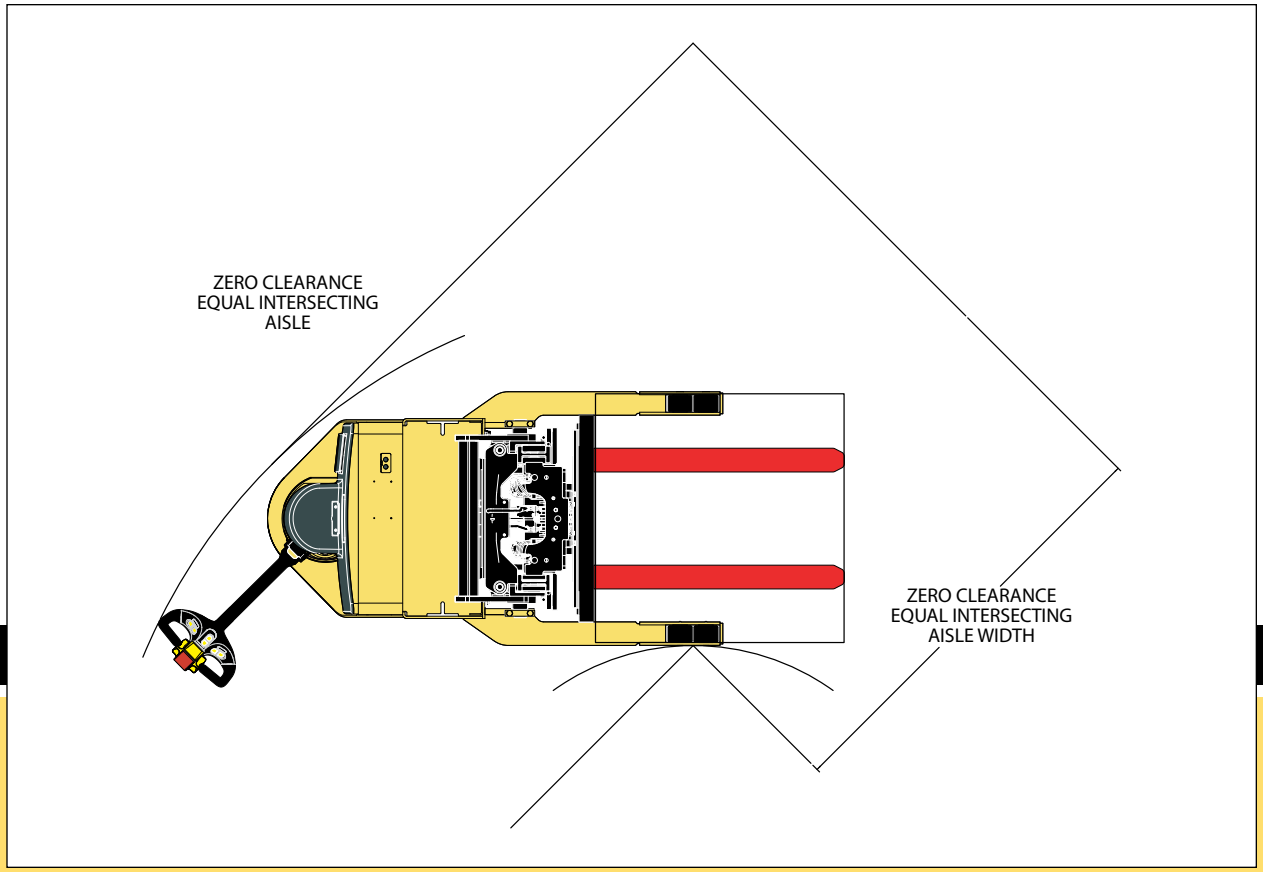

Zero Clearance / Right Angle Aisle Stacking / Intersecting Equal Aisle Stacking

To determine the correct dimension, take the larger sum of either the load or pallet dimensions for length and width. Add the dimension for optional configuration and the 6.0” to 12.0” operating clearance. All values are based on 4.0” spacing between loads. Please contact your local Hyster dealer for additional information on load spacing and base arm dimensions.

Load Width Open End Clearance
W20-30ZR Walkie Reach Stacker Truck

(Equipped with 2-stage VISTA mast and 13.5” battery compartment.)

Load Width	Outrigger ID	OAW	Load Length	Fork Length	Wheelbase	O.A.L.*	Length of Face to Forks
32	35	43	30-32	36	64.4	91.5	55.5
36	37	45	34-36	36	64.4	91.5	55.5
42	43	51	38-42	42	64.4	97.5	55.5
48	49	57	44-48	48	64.4	103.5	55.5

For 3-stage VISTA mast add 2.0”

Right Angle Stack
W20-30ZR Walkie Reach Stacker Truck

(Equipped with 2-stage VISTA mast and 13.5” battery compartment.)

LOAD WIDTH (INCHES)	LOAD LENGTH (INCHES)			
	36	40	42	48
36	82	89	92	99
40	81	88	91	99
41	80	88	91	99
42	80	88	91	99
48	80	86	89	98

For 3-stage VISTA mast add 2.0”

Intersecting Equal Aisle
W20-30ZR Walkie Reach Stacker Truck

(Equipped with 2-stage VISTA mast and 13.5” battery compartment.)

LOAD WIDTH (INCHES)	Load Up and Over Outrigger				Load Between Outriggers				
	36	40	42	48	OUTRIGGER OAW	36	40	42	48
36	63	63	63	63	44	69	69	69	69
40	65	65	65	65	48	71	71	71	71
41	65	65	65	65	49	71	71	71	71
42	66	66	66	66	50	71	71	71	71
48	69	69	69	69	57	74	74	74	74

For 3-stage VISTA mast add 2.0”

W25ZA$_2$ DIMENSIONS

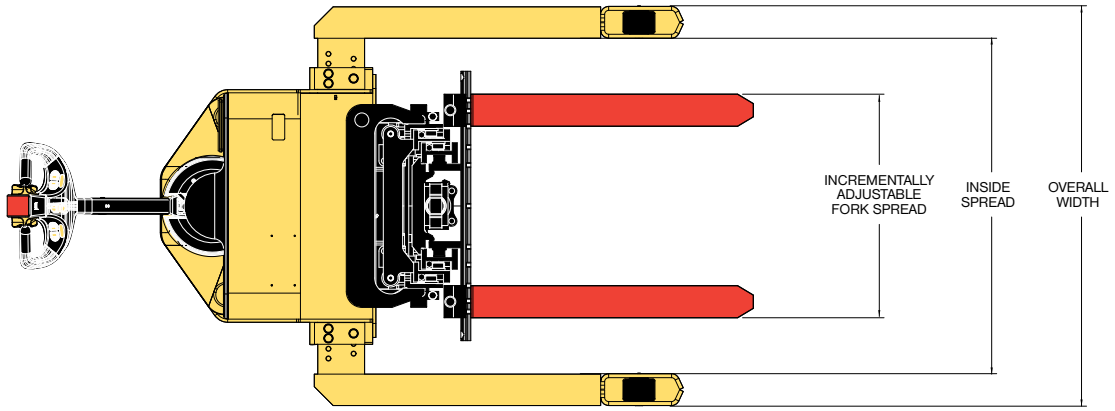

Dimensions are in inches (millimeters).

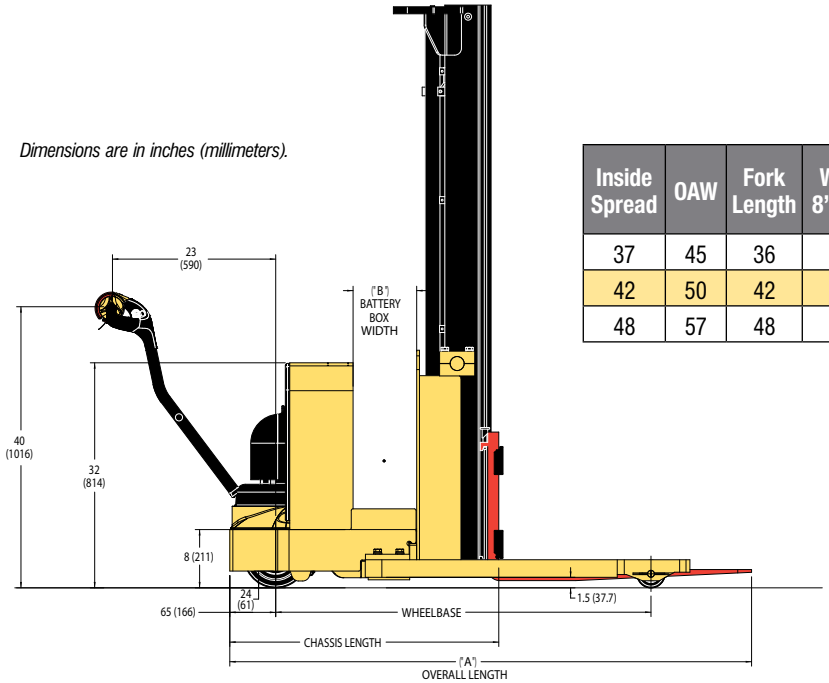

Inside Spread	OAW	Fork Length	Wheelbase 8" BC/9" BC	Overall Length 8" BC/9" BC	Battery Box "B"	Chassis Length 8" BC/9" BC	% Grade Clearance 8" BC/9" BC
37	45	36	54/55	73/74	8"/9"	37/38	11/14
42	50	42	54/55	79/80	8"/9"	37/38	11/14
48	57	48	54/55	85/86	8"/9"	37/38	11/14

W25ZA$_2$ MAST DIMENSIONS

Maximum Fork Height (TOF) †	Overall Lowered Height	Overall Extended Height		Free-Lift (TOF)
		w/ Load Backrest	w/o Load Backrest	w/o Load Backrest
in. (mm)	in. (mm)	in. (mm)	in. (mm)	in. (mm)
2-STAGE LIMITED FREE-LIFT (LFL) VISTA® MAST				
104 (2641)	72.0 (1,829)	152.0 (3861)	123.5 (3137)	6.0 (152)
126 (3200)	83.0 (2109)	174.0 (4420)	145.5 (3696)	6.0 (152)
130 (3302)	87.0 (2210)	178.0 (4522)	149.5 (3798)	6.0 (152)
144 (3657)	92.0 (2,337)	192.0 (4877)	163.5 (4,153)	6.0 (152)
150 (3810)	95.0 (2413)	198.0 (5030)	169.5 (4,306)	6.0 (152)
3-STAGE FULL FREE-LIFT (FFL) VISTA® MAST				
157 (3987)	72.0 (1,829)	205.0 (5,207)	176.5 (4,484)	50.0 (1,270)

† Lift heights over 123.0" (3,124 mm) (W30ZR) maximum fork height require reduced capacity or restricted back tilt. Lift heights over 141.0" (3,581 mm) (W20ZR) may require reduced capacity or restricted back tilt. Contact Applications Engineering if this measurement is critical.

* If load backrest extension is used on 3-stage FFL, add 27.5" (699 mm).

W25ZA$_2$ BATTERY AND COMPARTMENT SPECIFICATIONS

Battery Type	Number Of Cells	Cell Size	Plates Per Cell	Capacity 6 Hour Rate amp hr (kwh)	"X" Dimension in (mm)	"Y" Dimension in (mm)	"Z" Dimension in (mm)	Weight lb (kg)
Standard Battery Pack				185 AH @ 20 hr rate	28.4 (721)	7.9 (201)	23.9 (607)	310 (141)
GNB PalletPro® Battery Pack w/ 25 Amp Charger				195 (4.4)	27.3 (693)	7.5 (191)	26.4 (671)	375 (170)
Industrial	12	75	5	150 (3.5)	25.3 (643)	6.4 (163)	23.3 (592)	410 (186)
	12	85	5	170 (3.9)	25.3 (643)	6.4 (163)	23.3 (592)	425 (193)
	12	100	5	200 (4.6)	25.3 (643)	6.4 (163)	26.3 (668)	470 (213)
	12	75	7	225 (5.2)	25.7 (653)	8.8 (224)	23.3 (592)	540 (245)
	12	85	7	255 (6.0)	25.7 (653)	8.8 (224)	23.3 (592)	570 (259)

NOTES:
(1) Steel tray with cover required for all batteries.
(2) Battery connector type 175 Red (Gray is optional).
(3) Cable lead position "B".
(4) 20" cable length.
(5) Maximum cable gauge of 1/0.
(6) Battery well: 33" x 13.5" x open

W25ZA$_2$ SPECIFICATIONS

GENERAL	1	Manufacturer		**Hyster Company**
	2	Model		W25ZA$_2$
	3	Capacity, rated	lb. (kg)	2500 (1134)
	4	Load center	in. (mm)	24 (610)
	5	Power type		Battery - 24 Volt
	6	Operator type		Pedestrian
	7	Tire type, cushion, solid, pneumatic, etc.		Cushion
	8	Wheels, drive / load		1 / 2
DIMENSIONS	10	2-stg. limited free lift (LFL) (TOF)	in. (mm)	104.0 (2641)
	11	Standard Free lift (TOF)	in. (mm)	6.0 (152)
	12	Maximum Carriage Width	in. (mm)	33.7 (857)
	13	Forks, width / thickness / length	in. (mm)	3.9 / 1.6 / 42.0 (100 / 40 / 1067)
	14	Fork Spread (Outside Dimensions)	in. (mm)	30.4 (773)
	15	Tilt of Mast - Forward / Backward	degrees	
	16a	Length to face of forks : 8.0" Battery Compartment	in. (mm)	37.3 (947)
	16b	Length to face of forks : 9.0" Battery Compartment	in. (mm)	38.3 (973)
	16c	Length to face of forks : 13.5" Battery Compartment	in. (mm)	N/A
	17	Outrigger ID	min / max	37.1 / 39.4 / 41.7 / 49.0 (942 / 1002 / 1060 / 1245)
	18	Lowered Overall Height ((LOH)	in. (mm)	72.0 (1829)
	19	Maximum Fork Height (MFH)	in. (mm)	104.0 (2641)
	21	Turning radius, minimum outside w/48" load	in. (mm)	77.0 (1955)
	23	90° stack aisle (add load length)	in. (mm)	See Chart
	24	Equal Intersecting Aisle	in. (mm)	See Chart
		Stability (Comply with ANSI?)*		Yes
PERFORMANCE †	25	Travel speed, No Load	mph (km/h)	3.5 (5.6)
		Travel speed, Rated Load	mph (km/h)	3.0 (4.8)
	26	Lift speed, Std. No Load	ft/min (m/s)	30.0 (0.15)
		Lift speed, Std. Rated Load	ft/min (m/s)	22.0 (0.11)
	27	Lowering speed, Std. No Load	ft/min (m/s)	60.0 (0.3)
		Lowering speed, Std. Rated Load	ft/min (m/s)	80.0 (0.4)
WT.	29	Gradeability	%	10.0
	31	Total approximate weight without battery	lb. (kg)	2305 (1046)
WHEELS & TIRES	32	Axle load, No Load w/Min Battery drive / load	lb. (kg)	1523 / 1092 (691 / 495)
		Number of tires drive / load		
	33	Size of tire, drive	in. (mm)	9.0 x 4.0 Poly
	34	Size of tire, load	in. (mm)	4.0 x 2.8 Poly
	35	Wheelbase, distance 8.0" Compartment w/48" load	in. (mm)	53.8 (1367)
		Wheelbase, distance 9.0" Compartment w/48" load	in. (mm)	54.8 (1392)
		Wheelbase, distance 13.5" Compartment w/48" load	in. (mm)	N/A
	37	Ground clearance, No load lowest point	in. (mm)	1.0 (25)
	38	Ground clearance, No load center wheelbase	in. (mm)	1.5 (38)
BATT.	41	Battery, type		Lead Acid
	42	Battery, volts / ampere hours	V/ah	
	43	Battery, minimum weight	lb. (kg)	375 (170)
MOTOR	44	Traction motor, 60 min. rating	hp (kw)	2.3 (1.7)
		Pump motor, 15 min. rating	hp (kw)	4.0 (3.0)
	45	Traction motor control method		Transistor
	46	Number of speeds		Infinitely Variable
	47	Relief Pressure for Attachments	psi (kPA)	N/A
	49	Grade Clearance, % Clearance 8.0" Compartment	%	11.0
		Grade Clearance, % Clearance 9.0" Compartment	%	14.0
		Grade Clearance, % Clearance 13.5" Compartment	%	N/A

CERTIFICATION: These Hyster lift trucks meet design specifications of Part II ANSI B56.1-1969, as required by OSHA Section 1910.178(a)(2) and also comply with Part III ANSI B56.1-revision in effect at time of manufacture. Certification of compliance with the applicable ANSI standards appears on the lift truck.

† NOTE: Performance specifications are for truck equipped as described under Standard Equipment in this Technical Guide. Performance specifications are affected by the condition of the vehicle and how it is equipped, as well as by the nature and condition of the operating area. Specifications are subject to change and the proposed application should be discussed with your authorized Hyster Company Dealer.

W25ZA$_2$ DIMENSIONS

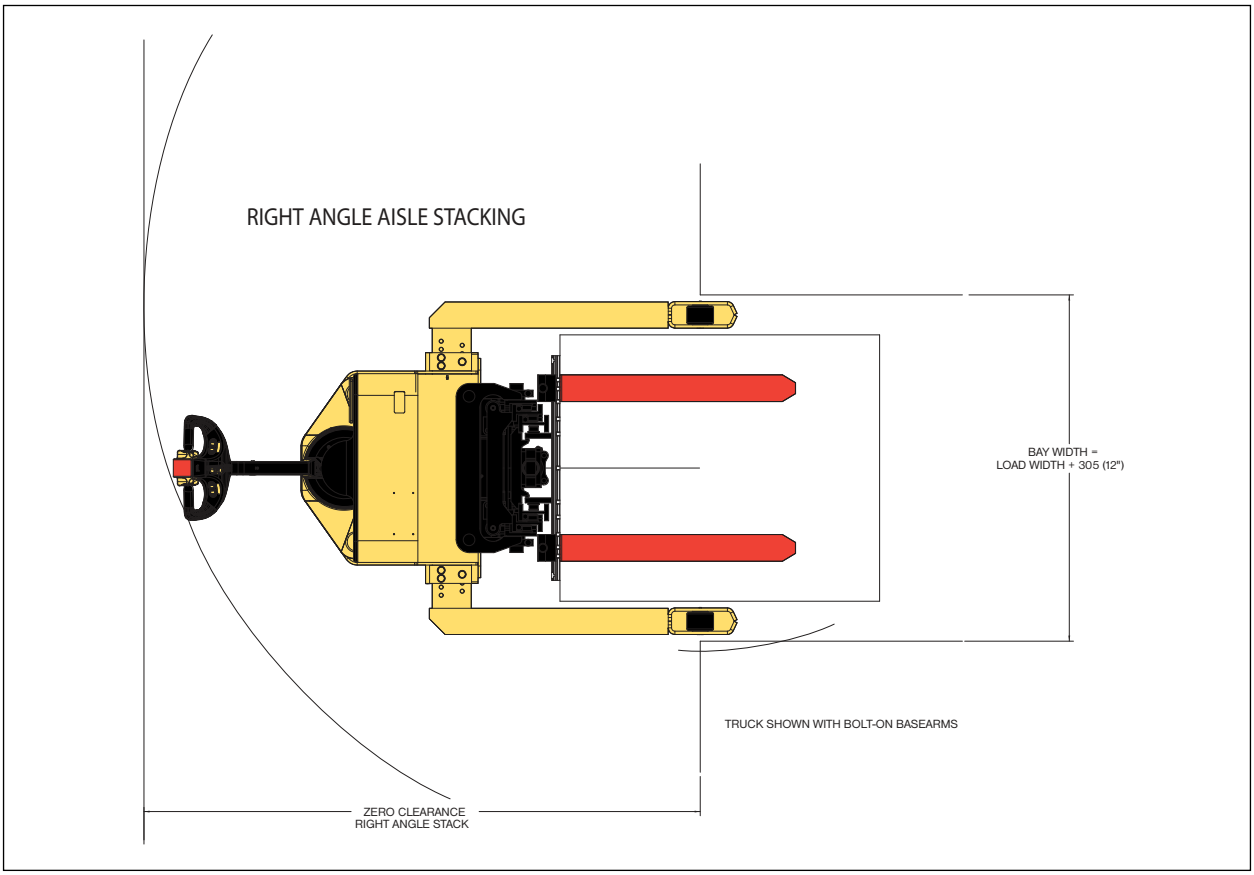

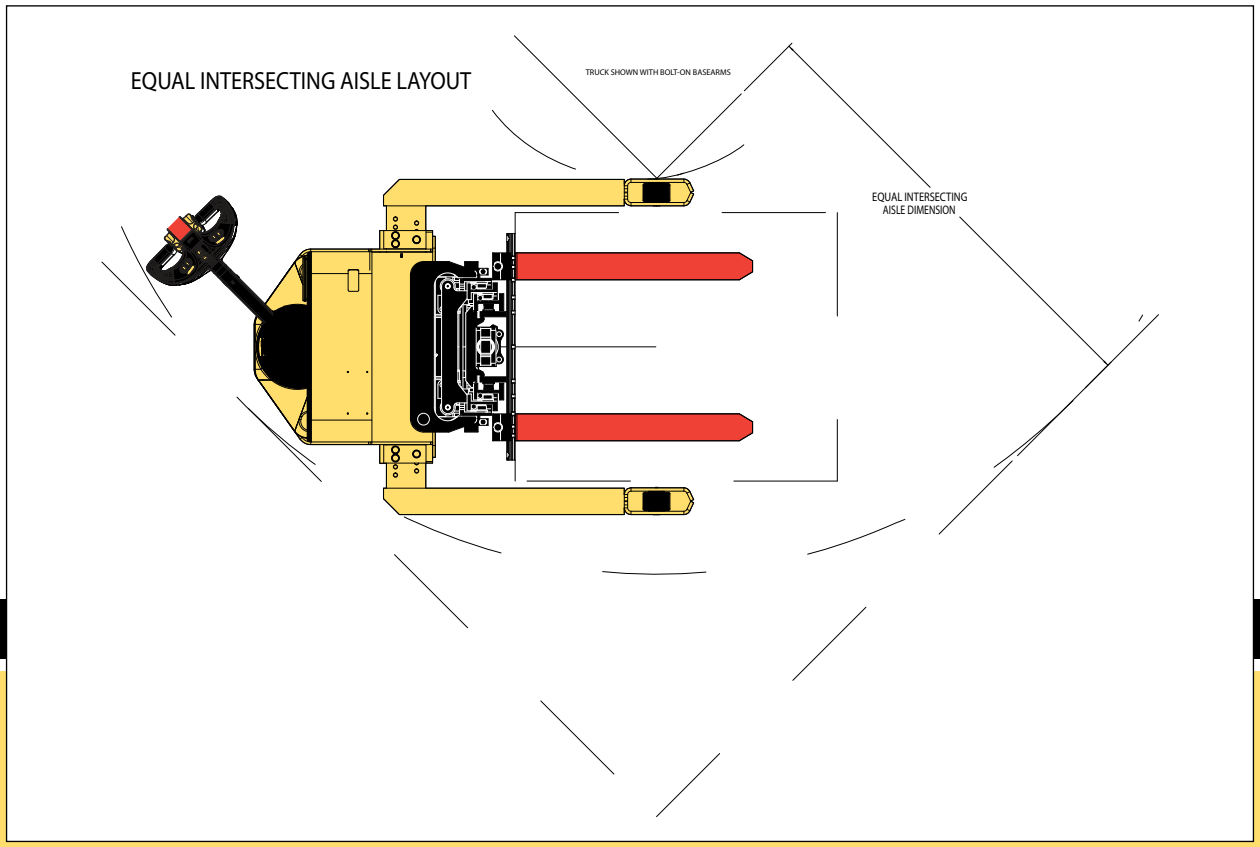

Zero Clearance / Right Angle Aisle Stacking / Intersecting Equal Aisle Stacking

To determine the correct dimension, take the larger sum of either the load or pallet dimensions for length and width. Add the dimension for optional configuration and the 6.0” to 12.0” operating clearance. All values are based on 4.0” spacing between loads. Please contact your local Hyster dealer for additional information on load spacing and base arm dimensions.

Load Width Open End Clearance
W25ZA$_2$ Walkie Reach Stacker Truck

(Equipped with 2-stage VISTA mast.)

Load Width	Outrigger ID	OAW	Load Length	Fork Length	Wheelbase 8” BC/9” BC	O.A.L.*	Length of Face to Forks 8” BC/9” BC
36	37	45	36	36	54/55	73/74	37/38
42	42	50	42	42	54/55	79/80	37/38
48	48	57	48	48	54/55	85/86	37/38

For 3-stage mast add 2.0”

Right Angle Stack
W25ZA$_2$ Walkie Straddle Stacker Truck

(Equipped with 2-stage VISTA mast and 8” battery compartment.)

Without Creep Mode			
Load Width (in.)	Load Length (in.)		
	36	40	48
36	82.5	82.5	82.5
40	83.3	83.3	83.3
48	84.4	84.4	84.4

With Creep Mode			
Load Length (in.)			
	36	40	48
36	64.4	64.4	64.4
40	64.8	64.8	64.8
48	69.4	69.4	69.4

Intersecting Equal Aisle
W25ZA$_2$ Walkie Straddle Stacker Truck

(Equipped with 2-stage VISTA mast and 8” battery compartment.)

Without Creep Mode			
Load Width (in.)	Load Length (in.)		
	36	40	48
36	63.1	63.1	63.1
40	65.5	65.5	65.5
48	68.9	68.9	68.9

With Creep Mode			
Load Length (in.)			
	36	40	48
36	56.3	56.3	56.3
40	58.4	58.4	58.4
48	61.6	61.6	61.6

Right Angle Stack
W25ZA$_2$ Walkie Straddle Stacker Truck

(Equipped with 2-stage VISTA mast and 9” battery compartment.)

Without Creep Mode			
Load Width (in.)	Load Length (in.)		
	36	40	48
36	83.5	83.5	83.5
40	84.2	84.2	84.2
48	85.3	85.3	85.3

With Creep Mode			
Load Length (in.)			
	36	40	48
36	65.4	65.4	65.4
40	66.3	66.3	66.3
48	70.0	70.0	70.0

For 3-stage VISTA mast add 2.0”

Intersecting Equal Aisle
W25ZA$_2$ Walkie Straddle Stacker Truck

(Equipped with 2-stage VISTA mast and 9” battery compartment.)

Without Creep Mode			
Load Width (in.)	Load Length (in.)		
	36	40	48
36	63.7	63.7	63.7
40	66.1	66.1	66.1
48	69.5	69.5	69.5

With Creep Mode			
Load Length (in.)			
	36	40	48
36	56.9	56.9	56.9
40	59.5	59.5	59.5
48	62.3	62.3	62.3

For 3-stage VISTA mast add 2.0”

W30ZA$_2$/W40ZA DIMENSIONS

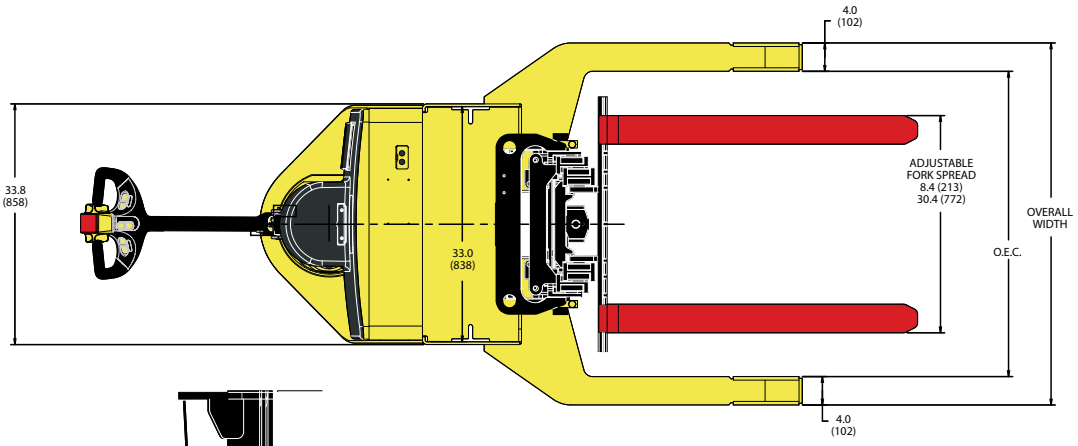

Dimensions are in inches (millimeters).

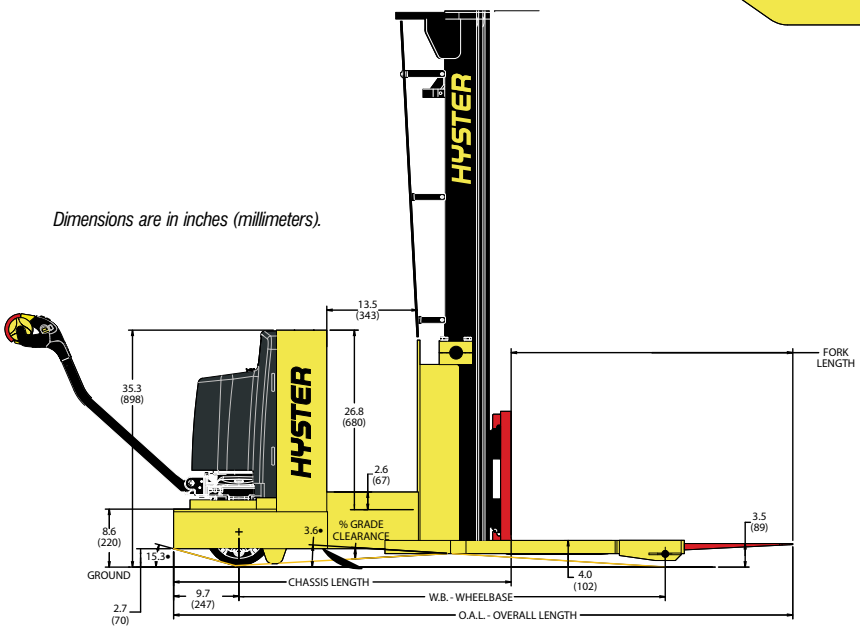

	9" Battery Box in (mm)	13.5" Battery Box in (mm)
Chassis Length	38.0 (972) / 43.75 (1,111)	N/A / 48.25 (1,226)
Wheelbase	57.0 (1,448) / 59.0 (1,499)	N/A / 63.6 (1,615)
Overall Length	80.0 (2,040) / 91.67 (2,328)	N/A / 96.13 (2,442)
% Grade Clearance	14 (353) / 14 (353)	N/A / 12.8 (325)
Overall Width	57 (1,448) / 57 (1,448)	N/A / 57 (1,448)
Inside Spread	49 (1,244) / 49 (1,244)	N/A / 49 (1,244)

W30ZA$_2$ BATTERY AND COMPARTMENT SPECIFICATIONS

Battery Type	Number Of Cells	Cell Size	Plates Per Cell	Capacity 6 Hour Rate amp hr (kwh)	"X" Dimension in (mm)	"Y" Dimension in (mm)	"Z" Dimension in (mm)	Weight lb (kg)
GNB PalletPro® Battery Pack w/25 Amp Charger				195 (4.4)	27.3 (693)	7.5 (191)	26.4 (671)	375 (170)
Industrial	12	75	5	150 (3.5)	25.3 (643)	6.4 (163)	23.3 (592)	410 (186)
	12	85	5	170 (3.9)	25.3 (643)	6.4 (163)	23.3 (592)	425 (193)
	12	100	5	200 (4.6)	25.3 (643)	6.4 (163)	26.3 (668)	470 (213)
	12	75	7	225 (5.2)	25.7 (653)	8.8 (224)	23.3 (592)	540 (245)
	12	85	7	255 (6.0)	25.7 (653)	8.8 (224)	23.3 (592)	570 (259)

NOTES:
(1) Steel tray with cover required for all batteries.
(2) Battery connector type 175 Red (Gray is optional).
(3) Cable lead position "B".
(4) 20" cable length.
(5) Maximum cable gauge of 1/0.
(6) Battery well: 33" x 13.5" x open

W40ZA BATTERY AND COMPARTMENT SPECIFICATIONS

Number Of Cells	Cell Size	Plates Per Cell	Capacity Amp-Hours	Kwh	"X" Dimension	"Y" Dimension	"Z" Dimension	Weight
12	75	7	255	5.2	25.6	8.8	23.3	536 lbs.
12	85	7	255	6.0	25.5	8.6	23.3	590 lbs.
12	75	11	375	8.7	26.5	13.0	23.3	825 lbs.
12	85	11	425	9.9	26.1	12.8	23.3	865 lbs.
12	75	13	450	10.5	30.9	13.0	23.3	987 lbs.
12	85	13	510	11.9	30.9	13.0	23.3	1,035 lbs.

NOTES:
(1) Steel tray with cover required for all batteries.
(2) Battery connector type 175 Red (Gray is optional).
(3) Cable lead position "B".
(4) 20" cable length.
(5) Maximum cable gauge of 1/0.
(6) Battery well: 33" x 13.5" x open

W30ZA$_2$ MAST DIMENSIONS

Maximum Fork Height (TOF) †	Overall Lowered Height	Overall Extended Height		Free-Lift (TOF)
		w/ Load Backrest	w/o Load Backrest	w/o Load Backrest
in. (mm)	in. (mm)	in. (mm)	in. (mm)	in. (mm)
2-STAGE LIMITED FREE-LIFT (LFL) VISTA® MAST				
104 (2641)	72.0 (1,829)	152.0 (3861)	123.5 (3137)	6.0 (152)
126 (3200)	83.0 (2109)	174.0 (4420)	145.5 (3696)	6.0 (152)
130 (3302)	87.0 (2210)	178.0 (4522)	149.5 (3798)	6.0 (152)
144 (3657)	92.0 (2,337)	192.0 (4877)	163.5 (4,153)	6.0 (152)
150 (3810)	95.0 (2413)	198.0 (5030)	169.5 (4,306)	6.0 (152)
3-STAGE FULL FREE-LIFT (FFL) VISTA® MAST				
157 (3987)	72.0 (1,829)	205.0 (5,207)	176.5 (4,484)	50.0 (1,270)

† Lift heights over 123.0" (3,124 mm) (W30ZR) maximum fork height require reduced capacity or restricted back tilt. Lift heights over 141.0" (3,581 mm) (W20ZR) may require reduced capacity or restricted back tilt. Contact Applications Engineering if this measurement is critical.
* If load backrest extension is used on 3-stage FFL, add 27.5" (699 mm).

W40ZA MAST DIMENSIONS

Maximum Fork Height (TOF) †	Overall Lowered Height	Overall Extended Height		Free-Lift (TOF)	Mast Weight
		w/ Load Backrest	w/o Load Backrest	w/o Load Backrest	
in. (mm)	in. (mm)	in. (mm)	in. (mm)	in. (mm)	lbs. (kg)
2-STAGE LIMITED FREE-LIFT (LFL) VISTA® MAST					
104.0 (2,642)	72.0 (1,829)	152.0 (3,861)	123.5 (3,137)	6.0 (152)	850 (386)
114.0 (2,896)	77.0 (1,956)	162.0 (4,115)	133.5 (3,391)	6.0 (152)	900 (408)
126.0 (3,200)	83.0 (2,108)	174.0 (4,420)	145.5 (3,696)	6.0 (152	950 (431)
144.0 (3,658)	92.0 (2,337)	192.0 (4,877)	163.5 (4,153)	6.0 (152	1,050 (476)
3-STAGE FULL FREE-LIFT (FFL) VISTA® MAST					
157.0 (3,988)	72.0 (1,829)	205.0 (5,207)	176.5 (4,483)	50.0 (1,270)	1,150 (522)
172.0 (4,369)	77.0 (1,956)	220.0 (5,588)	191.5 (4,864)	55.0 (1,397)	1,200 (544)
190.0 (4,826)	83.0 (2,108)	238.0 (6,045)	209.5 (5,321)	61.0 (1,549)	1,250 (567)

† Lift heights over 122.0" (3,098 mm) (2-Stage) or 153" (3,886 mm) (3-Stage) maximum fork height require reduced capacity or restricted back tilt.
* If load backrest extension is used on 3-stage FFL, add 28.5" (724 mm).

W30ZA$_2$/W40ZA SPECIFICATIONS

GENERAL	1	Manufacturer		**Hyster Company**	**Hyster Company**
	2	Model		W30ZA2	W40ZA
	3	Capacity, rated	lb. (kg)	3000 (1361)	4,000 (1,820)
	4	Load center	in. (mm)	24 (610)	24 (610)
	5	Power type		Battery - 24 Volt	Battery - 24 Volt
	6	Operator type		Pedestrian	Pedestrian
	7	Tire type, cushion, solid, pneumatic, etc.		Cushion	Cushion
	8	Wheels, drive / load		1 / 2	1 / 2
DIMENSIONS	10	2-stg. limited free lift (LFL) (TOF)	in. (mm)	104.0 (2641)	122.0 (3,098)
	11	Standard Free lift (TOF)	in. (mm)	6.0 (152)	6.0 (152)
	12	Maximum Carriage Width	in. (mm)	33.7 (857)	33.8 (857)
	13	Forks, width / thickness / length	in. (mm)	3.9 / 1.6 / 42.0 (100 / 40 / 1067)	4.0 / 1.75 /42.0 (100 / 44 / 1,067)
	14	Fork Spread (Outside Dimensions)	in. (mm)	30.4 (773)	30.4 (772)
	15	Tilt of Mast - Forward / Backward	degrees		
		Length to face of forks 8.0" Battery Compartment	in. (mm)	N/A	N/A
		9.0" Battery Compartment	in. (mm)	38.3 (973)	43.75 (1,111)
		13.5" Battery Compartment	in. (mm)	N/A	48.25 (1,226)
	17	Outrigger ID	in. (mm)	43.0 (1092)	43.0 (1,092)
	18	Lowered Overall Height ((LOH)	in. (mm)	72.0 (1829)	83.0 (2,108)
	19	Maximum Fork Height (MFH)	in. (mm)	104.0 (2641)	122.0 (3,098)
	21	Turning radius, minimum outside w/48" load	in. (mm)	80.6 (2047)	73.3 (1,861)
	23	90° stack aisle (add load length)	in. (mm)	See Chart	See Chart
	24	Equal Intersecting Aisle	in. (mm)	See Chart	See Chart
		Stability (Comply with ANSI?)*		Yes	Yes
PERFORMANCE †	25	Travel speed, No Load	mph (km/h)	3.5 (5.6)	3.6 (5.8)
		Travel speed, Rated Load	mph (km/h)	3.0 (4.8)	3.2 (5.1)
	26	Lift speed, Std. No Load	ft/min (m/s)	30.0 (0.15)	27.5 (0.14)
		Lift speed, Std. Rated Load	ft/min (m/s)	22.0 (0.11)	18.6 (0.09)
	27	Lowering speed, Std. No Load	ft/min (m/s)	60.0 (0.3)	52.5 (0.27)
		Lowering speed, Std. Rated Load	ft/min (m/s)	80.0 (0.4)	62.0 (0.31)
WT.	29	Gradeability	%	10.0	10.0
	31	Total approximate weight without battery	lb. (kg)	2323 (1054)	2,458 (1,115)
WHEELS & TIRES	32	Axle load, No Load w/Min Battery drive / load	lb. (kg)	1650 / 1048 (748 / 475)	1,735 / 1,323 (787 / 620)
		Number of tires drive / load			1/2
	33	Size of tire, drive	in. (mm)	9.0 x 5.0 Poly	10.0 x 5.0 Poly
	34	Size of tire, load	in. (mm)	4.0 x 2.8 Poly	4.0 x 2.8 Poly
	35	Wheelbase, distance 8.0" Compartment w/48" load	in. (mm)	N/A	N/A
		Wheelbase, distance 9.0" Compartment w/48" load	in. (mm)	57.0 (1448)	59.0 (1,499)
		Wheelbase, distance 13.5" Compartment w/48" load	in. (mm)	N/A	64.0 (1,626)
	37	Ground clearance, No load lowest point	in. (mm)	1.0 (25)	0.5 (13)
	38	Ground clearance, No load center wheelbase	in. (mm)	2.0 (51)	2.0 (51)
BATT.	42	Battery, type		Lead Acid	Lead Acid
		Battery, volts / ampere hours	V/ah		24/510
	43	Battery, minimum weight	lb. (kg)	375 (170)	600 (272)
MOTOR	45	Traction motor, 60 min. rating	hp (kw)	2.3 (1.7)	2.3 (1.7)
		Pump motor, 15 min. rating	hp (kw)	4.0 (3.0)	4.0 (3.0)
	46	Traction motor control method		Transistor	Transistor
	47	Number of speeds		Infinitely Variable	Infinitely Variable
	48	Relief Pressure for Attachments	psi (kPA)	N/A	2,900 (19,995)
	49	Grade Clearance, % Clearance 8.0" Compartment	%	N/A	N/A
		Grade Clearance, % Clearance 9.0" Compartment	%	14.0	14
		Grade Clearance, % Clearance 13.5" Compartment	%	N/A	12.8

CERTIFICATION: These Hyster lift trucks meet design specifications of Part II ANSI B56.1-1969, as required by OSHA Section 1910.178(a)(2) and also comply with Part III ANSI B56.1-revision in effect at time of manufacture. Certification of compliance with the applicable ANSI standards appears on the lift truck.

† NOTE: Performance specifications are for truck equipped as described under Standard Equipment in this Technical Guide. Performance specifications are affected by the condition of the vehicle and how it is equipped, as well as by the nature and condition of the operating area. Specifications are subject to change and the proposed application should be discussed with your authorized Hyster Company Dealer.

W30ZA$_2$/W40ZA DIMENSIONS

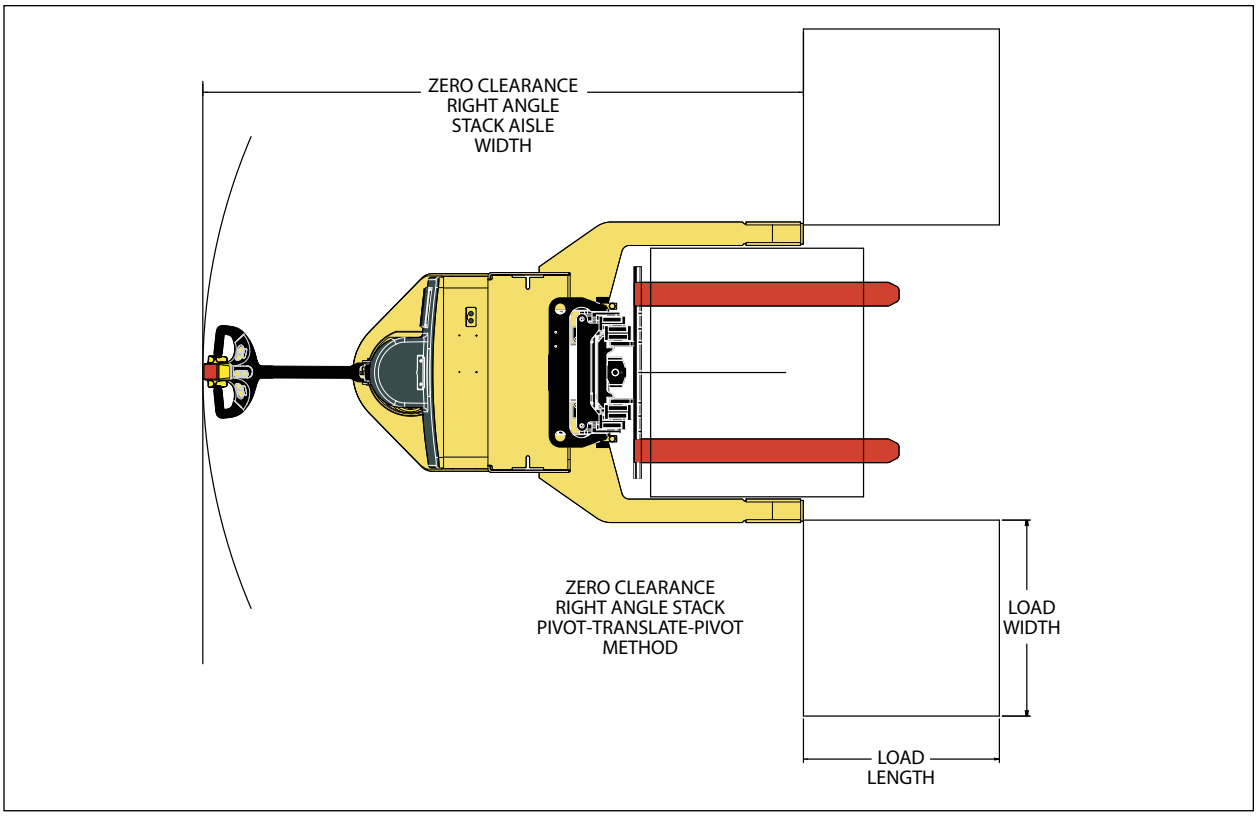

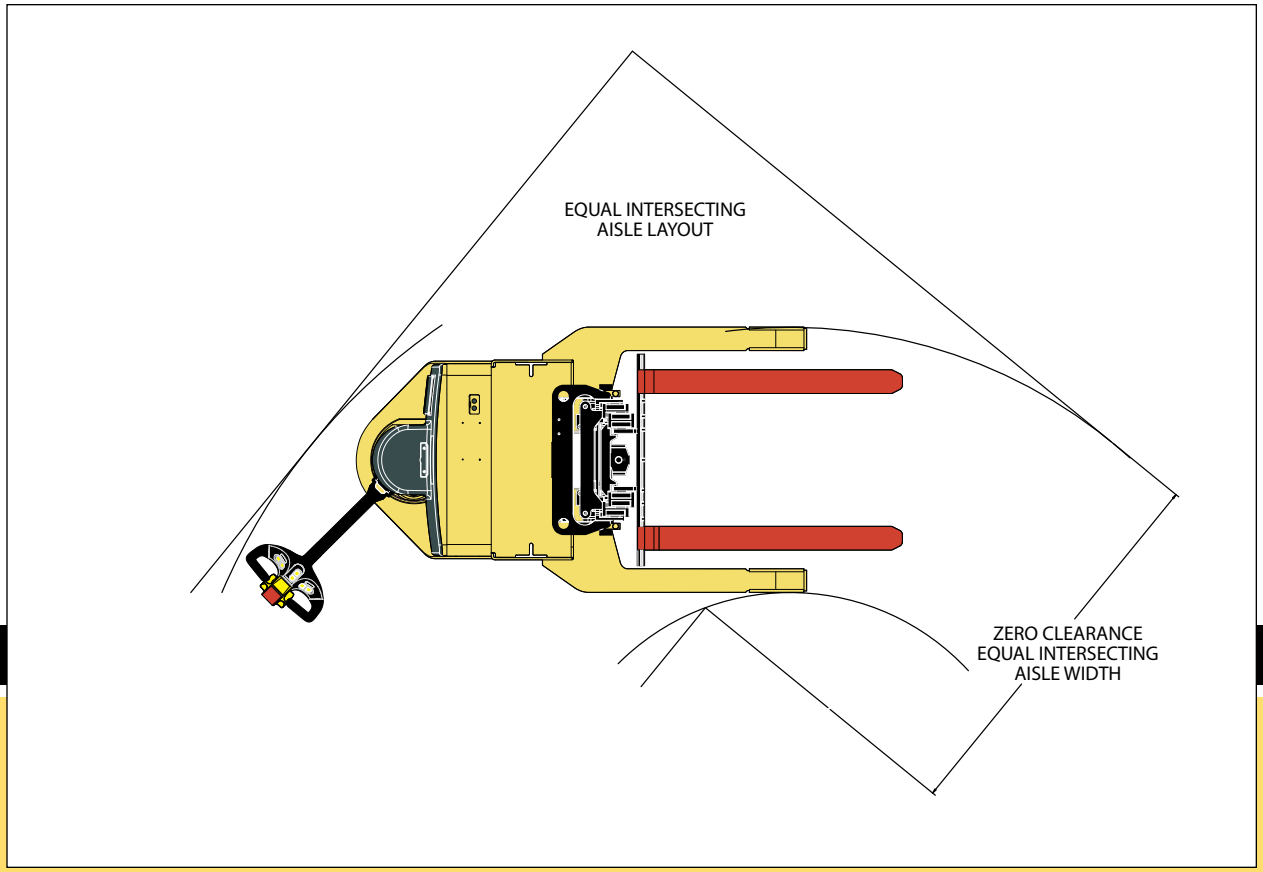

Zero Clearance / Right Angle Aisle Stacking / Intersecting Equal Aisle Stacking

To determine the correct dimension, first select the model you are using. Then take the larger sum of either the load or pallet dimensions for length and width. Add the dimension for optional configuration and the 6.0” to 12.0” operating clearance. All values are based on 6.0” spacing between loads, load on floor. Please contact your local Hyster dealership for additional information on load spacing and base arm dimensions.

Load Width Open End Clearance
W30ZA$_2$/W40ZA Walkie Straddle Stacker Truck

(Equipped with 2-stage VISTA mast and 9” and 13.5” battery compartment.)

Load Width	Outrigger ID	OAW	Load Length	Fork Length	Wheel-base 9”	Wheel-base 13.5”	O.A.L.* 9”	O.A.L.* 13.5”	Length to Face of Forks 9”	Length to Face of Forks 13.5”
32	37	45	30-32	36	51	56	80	84	44	48
36	37	45	34-36	36	53	58	80	84	44	48
40	43	51	38-42	42	56	61	86	90	44	48
48	49	57	44-48	48	59	64	92	96	44	48

For 3-stage VISTA mast add 2.0” ** 9” and 13.5 references battery compartment.*

Right Angle Stack
W30ZA$_2$ Walkie Straddle Stacker Truck

(Equipped with 2-stage VISTA mast and 9” battery compartment.)

Without Creep Mode			
Load Width (in.)	Load Length (in.)		
	36	40	48
36	85.6	85.6	85.6
40	86.5	86.5	86.5
48	87.4	87.4	87.4

With Creep Mode			
Load Length (in.)			
	36	40	48
36	67.4	67.4	67.4
40	68.5	68.5	68.5
48	71.3	71.3	71.3

Intersecting Equal Aisle
W30ZA$_2$ Walkie Straddle Stacker Truck

(Equipped with 2-stage VISTA mast and 9” battery compartment.)

Without Creep Mode			
Load Width (in.)	Load Length (in.)		
	36	40	48
36	65.0	65.0	65.0
40	67.9	67.9	67.9
48	70.8	70.8	70.8

With Creep Mode			
Load Length (in.)			
	36	40	48
36	58.5	58.5	58.5
40	61.1	61.1	61.1
48	63.8	63.8	63.8

Right Angle Stack
W40ZA Walkie Straddle Stacker Truck

(Equipped with 2-stage VISTA mast and 9” battery compartment.)

Without Creep Mode			
Load Width (in.)	Load Length (in.)		
	36	40	48
36	85.2	91.0	91.0
40	86.1	91.8	91.8
48	87.0	92.7	92.7

With Creep Mode			
Load Length (in.)			
	36	40	48
36	70.2	75.9	75.9
40	71.2	76.8	76.8
48	72.3	77.8	77.8

Intersecting Equal Aisle
W40ZA Walkie Straddle Stacker Truck

(Equipped with 2-stage VISTA mast and 9” battery compartment.)

Without Creep Mode			
Load Width (in.)	Load Length (in.)		
	36	40	48
36	64.0	65.0	67.0
40	66.0	68.0	70.0
48	69.0	71.0	73.0

With Creep Mode			
Load Length (in.)			
	36	40	48
36	56.0	57.0	59.0
40	58.0	60.0	62.0
48	61.0	63.0	65.0

Right Angle Stack
W40ZA Walkie Straddle Stacker Truck

(Equipped with 2-stage VISTA mast and 13.5” battery compartment.)

Without Creep Mode			
Load Width (in.)	Load Length (in.)		
	36	40	48
36	87.6	95.3	95.3
40	90.3	96.1	96.1
48	91.2	96.9	96.9

With Creep Mode			
Load Length (in.)			
	36	40	48
36	72.5	80.1	80.1
40	75.4	81.0	81.0
48	76.4	82.0	82.0

For 3-stage VISTA mast add 2.0”

Intersecting Equal Aisle
W40ZA Walkie Straddle Stacker Truck

(Equipped with 2-stage VISTA mast and 13.5” battery compartment.)

Without Creep Mode			
Load Width (in.)	Load Length (in.)		
	36	40	48
36	69.0	68.0	70.0
40	72.0	71.0	73.0
48	72.0	74.0	76.0

With Creep Mode			
Load Length (in.)			
	36	40	48
36	61.0	60.0	62.0
40	64.0	63.0	65.0
48	64.0	66.0	68.0

For 3-stage VISTA mast add 2.0”

W25-40ZC DIMENSIONS

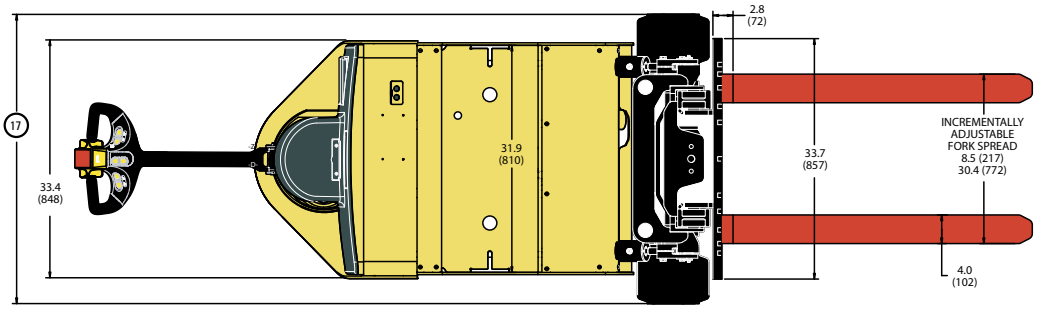

Circled dimensions correspond to the line numbers on the tabulated chart on the technical guide. Dimensions are in inches (mm).

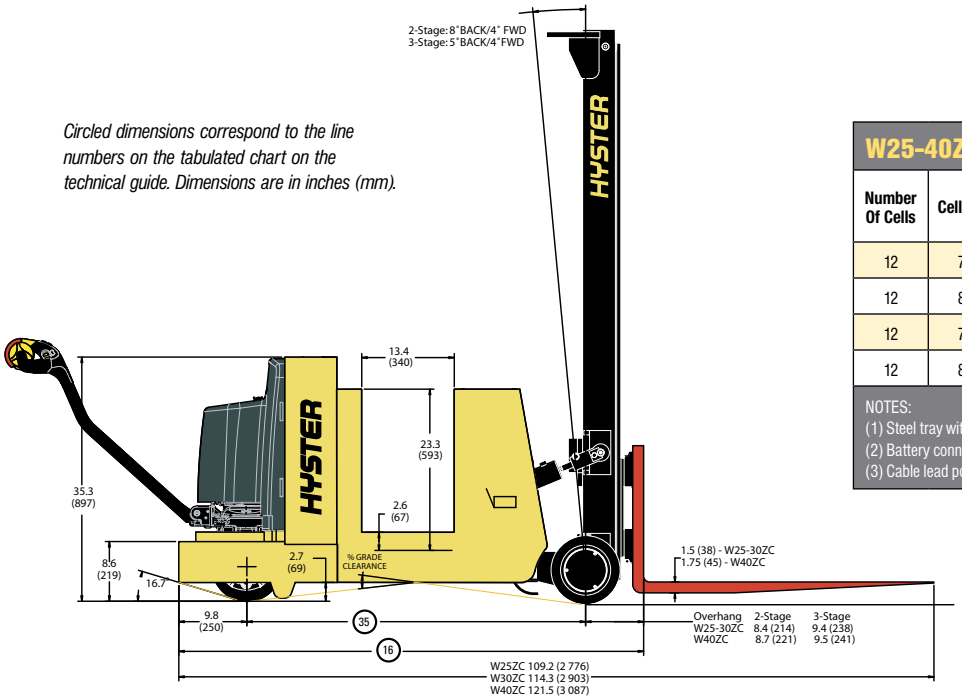

W25-40ZC BATTERY AND COMPARTMENT SPECIFICATIONS

Number Of Cells	Cell Size	Plates Per Cell	Capacity Amp-Hours	Kwh	"X" Dimension	"Y" Dimension	"Z" Dimension	Weight
12	75	11	375	8.7	26.5	13.0	23.3	825 lbs.
12	85	11	425	9.9	26.1	12.8	23.3	865 lbs.
12	75	13	450	10.5	30.9	13.0	23.3	987 lbs.
12	85	13	510	11.9	30.9	13.0	23.3	1035 lbs.

NOTES:
(1) Steel tray with cover required for all batteries.
(2) Battery connector type 175 Red (Gray is optional).
(3) Cable lead position "B".
(4) 20" cable length.
(5) Maximum cable gauge of 1/0.
(6) Battery well: 33" x 13.5" x open

W25-30ZC MAST DIMENSIONS

Maximum Fork Height (TOF) †	Overall Lowered Height	Overall Extended Height		Free-Lift (TOF)	Mast Weight
		w/ Load Backrest	w/o Load Backrest	w/o Load Backrest	
in. (mm)	in. (mm)	in. (mm)	in. (mm)	in. (mm)	lbs. (kg)
2-STAGE LIMITED FREE-LIFT (LFL) VISTA® MAST					
104.0 (2,642)	72.0 (1,829)	152.0 (3,785)	123.5 (3,140)	6.0 (152)	850 (386)
114.0 (2,896)	77.0 (1,956)	162.0 (4,039)	133.5 (3,391)	6.0 (152)	900 (408)
126.0 (3,200)	83.0 (2,108)	174.0 (4,343)	145.5 (3,696)	6.0 (152)	950 (431)
144.0 (3,658)	92.0 (2,337)	192.0 (4,801)	163.5 (4,153)	6.0 (152)	1,050 (476)
152.0 (3,861)	96.0 (2,438)	200.0 (5,080)	171.5 (4,356)	6.0 (152)	1,100 (499)
3-STAGE FULL FREE-LIFT (FFL) VISTA® MAST					
157.0 (3,988)	72.0 (1,829)	205.0 (5,207)	176.5 (4,483)	50.0 (1,270)	1,150 (522)
172.0 (4,369)	77.0 (1,956)	220.0 (5,588)	191.5 (4,864)	55.0 (1,397)	1,200 (544)
190.0 (4,826)	83.0 (2,108)	238.0 (6,045)	209.5 (5,321)	61.0 (1,549)	1,250 (567)
217.0 (5,512)	92.0 (2,337)	265.0 (6,731)	236.5 (6,007)	70.0 (1,798)	1,350 (612)
229.0 (5,817)	96.0 (2,438)	277.0 (7,036)	248.5 (6,312)	74.0 (1,900)	1,400 (635)

† Lift heights over 157.0" (3,988 mm) maximum fork height require reduced capacity or restricted back tilt.
* If load backrest extension is used on 3-stage FFL, add 28.5" (724 mm).

W40ZC MAST DIMENSIONS

Maximum Fork Height (TOF) †	Overall Lowered Height	Overall Extended Height		Free-Lift (TOF)	Mast Weight
		w/ Load Backrest	w/o Load Backrest	w/o Load Backrest	
in. (mm)	in. (mm)	in. (mm)	in. (mm)	in. (mm)	lbs. (kg)
2-STAGE LIMITED FREE-LIFT (LFL) VISTA® MAST					
100.0 (2,540)	72.0 (1,829)	148.0 (3,759)	119.5 (3,035)	6.0 (152)	850 (386)
110.0 (2,794)	77.0 (1,956)	158.0 (4,013)	129.5 (3,289)	6.0 (152)	900 (408)
122.0 (3,099)	83.0 (2,108)	170.0 (4,318)	141.5 (3,594)	6.0 (152)	950 (431)
140.0 (3,556)	92.0 (2,337)	188.0 (4,775)	159.5 (4,051)	6.0 (152)	1,050 (476)
148.0 (3,759)	96.0 (2,438)	196.0 (4,978)	167.5 (4,255)	6.0 (152)	1,100 (499)
3-STAGE FULL FREE-LIFT (FFL) VISTA® MAST					
153.0 (3,886)	72.0 (1,829)	201.0 (5,105)	172.5 (4,382)	47.0 (1,194)	1,150 (522)
168.0 (4,267)	77.0 (1,956)	216.0 (5,486)	187.5 (4,763)	52.0 (1,321)	1 200 (544)
186.0 (4,724)	83.0 (2,108)	234.0 (5,944)	205.5 (5,220)	58.0 (1,473)	1,250 (567)
213.0 (5,410)	92.0 (2,337)	261.0 (6,629)	232.5 (5,906)	67.0 (1,702)	1,350 (612)
225.0 (5,715)	96.0 (2,438)	273.0 (6,934)	244.5 (6,210)	71.0 (1,803)	1,400 (635)

† Lift heights over 153.0" (3,886 mm) maximum fork height require reduced capacity or restricted back tilt.
* If load backrest extension is used on 3-stage FFL, add 28.5" (724 mm).

W25-40ZC SPECIFICATIONS

GENERAL	1	Manufacturer		**Hyster Company**	**Hyster Company**	**Hyster Company**
	2	Model		W25ZC	W30ZC	W40ZC
	3	Capacity, rated		2,500 (1,130)	3,000 (1,360)	4,000 (1,820)
	4	Load center		24 (610)	24 (610)	24 (610)
	5	Power type		24V - Electric	24V - Electric	24V - Electric
	6	Operator type		Pedestrian	Pedestrian	Pedestrian
	7	Tire type, cushion, solid, pneumatic, etc.		Cushion	Cushion	Cushion
	8	Wheels, drive / load		1 / 2	1 / 2	1 / 2
DIMENSIONS	10	2-stg. limited free lift (LFL) (TOF)	in. (mm)	126.0 (3,200)	126.0 (3,200)	122.0 (3,099)
	11	Standard Free-lift (TOF)	in. (mm)	6.0 (152)	6.0 (152)	6.0 (152)
	12	Maximum Carriage Width	in. (mm)	33.7 (857)	33.7 (857)	33.7 (857)
	13	Forks, width / thickness / length	in. (mm)	4.0 (100) / 1.5 (40) / 42.0 (1,067)	4.0 (100) / 1.5 (40) / 42.0 (1,067)	4.0 (100) / 1.75 (44) / 42.0 (1,067)
	14	Fork Spread (Outside Dimensions)	in. (mm)	30.4 (773)	30.4 (773)	30.4 (773)
	15	Tilt of Mast - Backward / Forward	degrees	5 / 4	5 / 4	5 / 4
	16	Length to face of forks	in. (mm)	67.3 (1,709)	72.3 (1,836)	79.5 (2,020)
	17	Overall Width (Standard Tires)	in. (mm)	38.3 (973)	38.3 (973)	38.3 (973)
	18	Lowered Overall Height (LOH)	in. (mm)	83.0 (2,108)	83.0 (2,108)	83.0 (2,108)
	19	Maximum Fork Height (MFH)	in. (mm)	126.0 (3,200)	126.0 (3,200)	122 (3,099)
	21	Turning radius, minimum outside	in. (mm)	58.7 (1,492)	63.7 (1,619)	80.0 (1,803)
	22	Overhang, C/L of load wheel to face of forks	in. (mm)	8.4 (214)	8.4 (214)	8.7 (221)
	23	90° stack aisle	in. (mm)	SEE CHART	SEE CHART	SEE CHART
	24	Equal Intersecting Aisle	in. (mm)	SEE CHART	SEE CHART	SEE CHART
		Stability (Comply with ANSI?) *		Yes	Yes	Yes
PERFORMANCE †	25	Travel speed, No Load	mph (km/h)	3.5 (5.6)	3.4 (5.5)	3.1 (5.0)
		Travel speed, Rated Load	mph (km/h)	3.4 (5.5)	3.3 (5.3)	2.7 (4.3)
	26	Lift speed, Std. No Load	ft/min (m/s)	36.0 (0.18)	36.0 (0.18)	36.0 (0.18)
		Lift speed, Std. Rated Load	ft/min (m/s)	28.0 (0.14)	26.0 (0.13)	22.0 (0.11)
	27	Lowering speed, Std. No Load	ft/min (m/s)	60.0 (0.30)	60.0 (0.30)	60.0 (0.30)
		Lowering speed, Std. Rated Load	ft/min (m/s)	70.0 (0.35)	74.0 (0.37)	78.0 (.38)
WT.	29	Gradeability	%	10.00	10.00	10.00
	31	Total approximate weight without battery	lb. (kg)	4,194 (1,906)	4,917 (2,235)	5,496 (2,493)
WHEELS & TIRES	32	Axle load, no load drive	lb. (kg)	2,239 (1,063)	2,811 (1,278)	3,123 (1,420)
		Axle load, load with minimum battery	lb. (kg)	2,455 (1,111)	2,706 (1,230)	2,973 (1,351)
	33	Size of tire, drive	in. (mm)	10.0 x 5.0 / (254 x 127) Poly	10.0 x 5.0 / (254 x 127) Poly	10.0 x 5.0 / (254 x 127) Poly
	34	Size of tire, load	in. (mm)	10.0 x 6.0 / (254 x 152) Poly	10.0 x 6.0 / (254 x 152) Poly	10.0 x 7.0 / (254 x 178) Poly
	35	Wheelbase	in. (mm)	49.0 (1,245)	54.0 (1,372)	61.0 (1,549)
	37	Ground clearance, No Load lowest point	in. (mm)	0.6 (15)	0.6 (15)	0.6 (15)
	38	Ground clearance, No Load center wheelbase	in. (mm)	2.8 (69)	2.8 (69)	2.8 (69)
BATT.	41	Battery, type		Lead acid	Lead acid	Lead acid
	42	Battery, volts / ampere hours	V/ah	24 / 510	24 / 510	24 / 510
	43	Battery, minimum weight	lb. (kg)	600 (273)	600 (273)	600 (273)
MOTOR	44	Traction motor, 60 min. rating	hp (kw)	2.3 (1.7)	2.3 (1.7)	2.3 (1.7)
		Pump motor, 15 min. rating	hp (kw)	4.0 (3.0)	4.0 (3.0)	4.0 (3.0)
	45	Traction motor control method		Transistor	Transistor	Transistor
	46	Number of speeds		Infinitely variable	Infinitely variable	Infinitely variable
	47	Relief pressure for attachments	psi (kPA)	2,900 (19,995)	2,900 (19,995)	2,900 (19,995)
	49	Grade Clearance 13.4" Compartment	%	22.7	20.9	18.8

CERTIFICATION: These Hyster lift trucks meet design specifications of Part II ANSI B56.1-1969, as required by OSHA Section 1910.178(a)(2) and also comply with Part III ANSI B56.1-revision in effect at time of manufacture. Certification of compliance with the applicable ANSI standards appears on the lift truck.

† NOTE: Performance specifications are for truck equipped as described under Standard Equipment in this Technical Guide. Performance specifications are affected by the condition of the vehicle and how it is equipped, as well as by the nature and condition of the operating area. Specifications are subject to change and the proposed application should be discussed with your authorized Hyster Company Dealer.

W25-40ZC DIMENSIONS

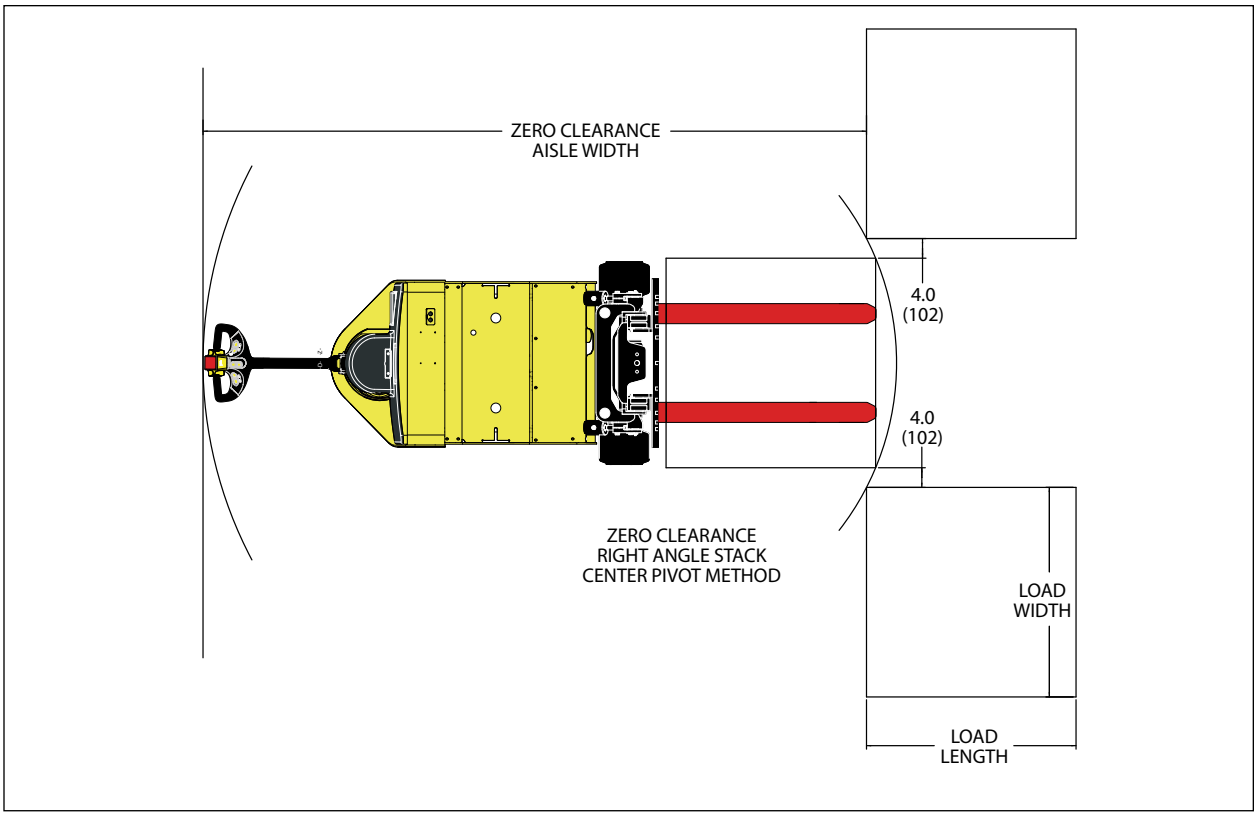

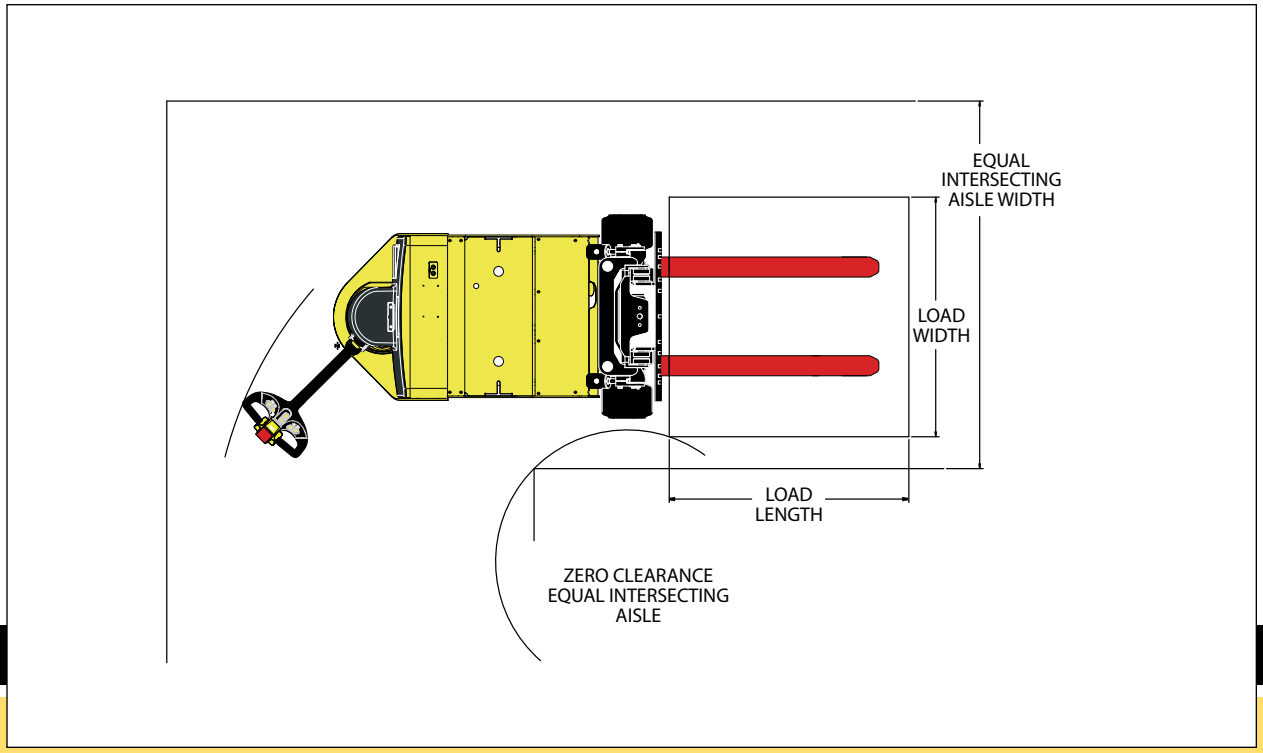

Zero Clearance / Right Angle Aisle Stacking / Intersecting Equal Aisle Stacking

To determine the correct dimension, take the larger sum of either the load or pallet dimensions for length and width. Add the dimension for optional configuration and the 6.0” to 12.0” operating clearance. All values are based on 4.0” spacing between loads. Please contact your local Hyster dealer for additional information on load spacing.

Right Angle Stack
W25-40ZC Walkie Counterbalanced Stacker Truck

(Equipped with 2-stage VISTA mast and 13.5” battery compartment.)

LOAD WIDTH (IN.)	W25ZC Load Length (in.)			
	36	40	42	48
36	125	130	132	138
40	125	130	132	138
42	125	130	132	138
48	125	130	132	138

W30ZC Load Length (in.)				
	36	40	42	48
36	130	134	137	143
40	130	134	137	143
42	130	134	137	143
48	130	134	137	143

W40ZC Load Length (in.)				
	36	40	42	48
36	137	142	144	150
40	137	142	144	150
42	137	142	144	150
48	137	142	144	150

Intersecting Equal Aisle
W25-40ZC Walkie Counterbalanced Stacker Truck

(Equipped with 2-stage VISTA mast.)

LOAD WIDTH (IN.)	W25ZC Load Length (in.)			
	36	40	42	48
36	61	63	65	68
40	61	63	65	68
42	62	64	66	69
48	67	69	70	74

W30ZC Load Length (in.)				
	36	40	42	48
36	62	64	65	69
40	62	64	65	69
42	63	65	66	70
48	68	70	71	74

W40ZC Load Length (in.)				
	36	40	42	48
36	75	77	78	81
40	75	77	78	81
42	76	77	78	81
48	78	80	81	86

STANDARD FEATURES AND OPTIONS

CAPACITY:
Model W20ZR: 2,000 lbs. at 24” (907 kg at 610 mm) load center.
Model W30ZR: 3,000 lbs. at 24” (1,361 kg at 610 mm) load center.

RATED CAPACITIES ARE FOR TRUCKS EQUIPPED WITH:
- Two-stage limited free-lift mast to 123” (3,124 mm) maximum fork height.
- 24.0” (610 mm) single reach attachment with 36.0” to 48.0” (914 to1,219 mm) long forks as required.
- Load backrest extension
- Minimum weight battery

CAPACITY:
Model W25ZA$_2$: 2,500 lbs. at 24” (1,134 kg at 610 mm) load center.
Model W30ZA$_2$: 3,000 lbs. at 24” (1,361 kg at 610 mm) load center.
Model W40ZA: 4,000 lbs. at 24” (1,814 kg at 610 mm) load center.

RATED CAPACITIES ARE FOR TRUCKS EQUIPPED WITH:
- Two-stage limited free-lift mast to 150” (3,810 mm) (W25-30ZA$_2$) and 140” (3,556 mm) (W40ZA) maximum fork height.
- 33.8” (859 mm) Class II carriage with 36.0” to 48.0” (914 to1,219 mm) long forks as required.
- Load backrest extension
- Minimum weight battery

CAPACITY:
Model W25ZC: 2,500 lbs. at 24” (1,134 kg at 610 mm) load center.
Model W30ZC: 3,000 lbs. at 24” (1,361 kg at 610 mm) load center.
Model W40ZC: 4,000 lbs. at 24” (1,814 kg at 610 mm) load center.

RATED CAPACITIES ARE FOR TRUCKS EQUIPPED WITH:
- Two-stage limited free-lift mast to 152” (3,861 mm) (W25-30ZC) or 148” (3,759 mm) (W40ZC) maximum fork height.
- 33.8” (859 mm) wide hook type Class II carriage with 36.0” to 48.0” (914 to1,219 mm) long forks as required.
- Load backrest extension
- Minimum weight battery

STANDARD EQUIPMENT

Complete truck has:
- 2-stage limited free-lift VISTA® mast with maximum fork height of 123” (3,124 mm)
- 24.0” (610 mm) single reach attachment
- 42” (1,067 mm) long forks
- 24 volt
- SEM transistor control with integrated transistor hoist control
- regenerative braking
- low battery lift interrupt
- impact resistant, ergonomically designed, bottom mounted control handle with gas spring return
- conveniently located controls including: butterfly-type accelerator control, and proportional lifting/lowering buttons
- three user-selectable performance modes
- direction reversing switch
- key switch
- electronic horn
- battery connector – 175 Amp, Red
- battery compartment – 33.0” x 13.5” (838 x 343 mm)
- electromagnetic park brake with service override
- polyurethane drive tire 10.0” x 5.0” (254 x 127 mm)
- tandem load wheels – 4.0” x 2.8” (102 x 71 mm)
- 3 degree forward, 4 degree back, fork tilt
- knock-out load wheel axles
- wire mesh mast screen
- 35” (889 mm) open end clearance
- static discharge strap
- standard construction
- operator manual
- UL Classification E.

Battery not included.

OPTIONAL EQUIPMENT

- Cold storage/freezer construction
- battery rollers (N/A W25-30ZA$_2$)
- battery discharge indicator with hour meter and fault light
- 37” – 49” (940 – 1,245 mm) open end clearance base arm width
- lexan mast shield
- slow speed accessory button
- parts manual (printed or CD)
- toggle ignition switch
- 3-stage full free lift VISTA mast
- backup alarm kit
- strobe light kit
- convenience tray (fits 13.5” battery box)
- sideshift

MASTS

Masts available are the standard 2-Stage Limited Free Lift (LFL) and optional 3-Stage Full Free Lift (FFL). Good load distribution can be achieved based on the trunnion mounted mast design. It also allows for easy mast removal for service and transport.

CARRIAGES

W20-30ZR trucks use 32.5” (826 mm) wide carriage and configured for Class II hook type forks. Overall width with LBE is 33.35” (847 mm). Maximum outside-to-outside fork spacing is 14.2” (361 mm) minimum to 30.0” (762 mm) maximum.

W25-30ZA$_2$/W40ZA trucks use 33.8” (857 mm) wide carriage with hang on Class II hook type forks. Overall width with LBE is 35.0” (889 mm). Maximum outside-to-outside fork spacing is 8.4” (213 mm) minimum to 30.4” (772 mm) maximum.

W25-40ZC trucks use 33.8” (857 mm) wide carriage which is configured for Class II hook type forks. Overall width with LBE is 35.0” (889 mm). Maximum outside-to-outside fork spacing is 8.4” (213 mm) minimum to 30.4” (772 mm) maximum.

FORKS

W20-30ZR Class II hook-type forks measure 1.5” x 4.0” x 36.0” - 48.0” (40 x 100 x 900 - 1,219 mm).

W30ZA$_2$ hook-type, Class II pallet forks measure 1.5” x 4.0” x 36.0” - 48.0” (40 x 100 x 900 - 1,219 mm).

W40ZA hook-type, Class II pallet forks measure 1.75” x 4.0” x 36.0” - 48.0” (44 x 100 x 900 - 1,219 mm).

W25-40ZC Class II hook-type forks measure 1.5” x 4.0” x 36.0” - 48.0” (40 x 100 x 900 - 1,219 mm).

ELECTRONIC CONTROLS

These Walkie Reach Stacker trucks feature a Separately Excited Motor (SEM) transistor control system with integrated transistor hoist control which offers:

- Static return to off
- Over temperature protection
- Auto Deceleration System (ADS)
- Fault / status codes
- Transistor controller protected by current limit and thermal limit.
- Adjustable acceleration for smooth starts.
- Control settings programmable to match performance requirements.
- Provides battery voltage for smooth, stepless acceleration.

This SEM Traction Control Technology utilizes Metal Oxide Semiconductor Field Effect Transistor (MOSFET) transistors and provides separate control of the traction motor armature and field for optimum speed and torque performance, resulting in improved productivity. Regenerative braking is used which significantly reduces the current through the traction motor brushes during plugging, resulting in increased brush life.

BATTERIES

The truck is configured for flooded and low-maintenance batteries. The battery type is a selectable feature of the traction system.

HYDRAULIC SYSTEM

- 2,900 PSI (20.0 mPa) tilt/lift hydraulic system allows the use of streamlined hydraulic lines and components. Auxiliary systems use 2,900 PSI (20.0 mPa) relief in all valve variations.
- Fingertip controls provides precise operator control of hydraulic systems.
- Optional Transistor hydraulics extends battery shift life and longevity of hydraulic pump’s motor brushes.

DRIVE TRAIN

Traction motors have Class H insulation for improved thermal performance. Premium brush compound and constant force brush springs are used for increased brush and commutator life.

The Master Drive Unit (MDU) used in the Hyster W60Z is used in this series of Walkie Reach Stackers. The MDU has a stationary traction motor which eliminates the problem with rotating or flexing power cables from the traction motor to the traction controller.

The support bearings and pinion are integral to the MDU eliminating the potential of damaging the gears when assembling the motor to the MDU. By integrating the pinion, the gear mesh can be better controlled resulting in a quieter MDU and the splined coupling allows for quick removal and installation of the traction motor.

The new steering design uses tapered roller bearings which are internal to the MDU, therefore, sealed from environmental conditions. The bearings are lubricated by the MDU gear oil which makes periodic lubrication unnecessary.

A drive axle string guard has been added to lower the risk for drive axle bearing seal damage due to shrink-wrap or banding tape.

Standard drive tire is 10” x 5” press on 90 durometer polyurethane.

BRAKES

Auto deceleration system (ADS) and “plugging” (regenerative braking) are the primary method stopping the truck. The traction motor will retard, or decelerate the truck when the throttle is returned to the neutral position.

The brake is an electrically released, spring applied, electromechanical brake. The brake is released by lowering the tiller handle and rotating the direction/speed control. The brake is applied when the handle is raised or lowered to the brake “ON” position, or a traction control fault occurs.

PERFORMANCE MODES

The W20-30ZR series comes standard with three performance modes selectable by the operator. Depending on which mode is selected, the forklift operator can adjust the acceleration, deceleration, and top travel speed. Mode 2 is the factory default setting.

- Mode 1 - Economy mode (battery saver). This mode allows soft acceleration, reduced top travel speed with auto deceleration adjusted to a high level.
- Mode 2 - Performance with ADS. Choosing this mode gives the operator medium acceleration, reduced top travel speed with auto deceleration adjusted to a high level.
- Mode 3 - Performance with minimum ADS. The operator achieves high acceleration, high top travel speed with auto deceleration adjusted to a minimum level.

By choosing which performance mode best fits your working environment, the performance of the truck can be optimized. An optional fourth mode is available for custom settings through your Hyster dealer.

REACH MECHANISM

The Walkie Reach Stacker lift trucks (W20-30ZR) have a computer-designed reach mechanism which provides 24 inches of extension. Superior visibility is provided by the open carriage design and optimal hose routing. Carriage, load backrest, hook type forks and optional integral sideshifter all tilt and sideshift together. Smooth operation is provided by fully-cushioned reach/retract cylinders and pivot points with high pressure grease fittings for lubrication. Even distribution of the load is achieved with the dual tilt cylinders.

OPERATOR AREA

- Equipped with a bottom-mounted tiller handle.
- The wrap-around traction reversing actuator (belly switch) provides a large area for contact with the operator.
- The horn has been centrally located on the top of the tiller to provide easy access.
- The optional creep speed control is easily operated by either thumb and located on the backside of the tiller handle
- The lift and lower controls have a “keyboard” feel. The operator can use these functions without repositioning their hands.
- The direction/throttle control actuators (butterfly wings) are designed for thumb actuation in the forks last direction and for thumb and forefinger acuation in the forks first direction. This control utilizes Hall-effect sensor technology.

Special attachments, equipment or accessories not listed above may be available through Applications Engineering for specific application requirements.

It's not just about the lift trucks.

Any company worth its weight knows success has just as much to do with the support before and after the sale as the sale itself. We pride ourselves on being more than just a lift truck manufacturer. Through our Dealer Network, we're also fleet managers, parts suppliers, capital procurement specialists and trainers. You'll find that when it comes to service, we do it all.

Hyster® Fleet Services

As much as we'd like for your entire fleet to be Hyster, we know that's not always the case. But just because you also operate other brands doesn't mean we can't manage your lift truck maintenance and replacement plan. We can analyze your current fleet or provide summary of your fleet history and a cost-effective proposal for replacement and scheduled maintenance of all your vehicles. Once this initial review is complete, we'll continue to monitor your fleet to ensure it's performing optimally.

UNISOURCE™ Parts Program

In addition to providing fleet management for a variety of brands, we can also serve as your source of parts for all your lift trucks. With the Hyster UNISOURCE parts and service program, we offer approximately 2 million part number crosses for most brands of materials handling and other in-plant mobile equipment. UNISOURCE also has remanufactured parts that provide the same quality and guarantee but at a lower price. And we can deliver parts to you in less than 24 hours, any day of the week. How's that for convenience?

Rental Products

At Hyster Company, we're always looking for ways to help you keep your productivity up. Through the Hyster Dealer Network, you can access rental equipment for the times when leasing or buying isn't a practical option. Your local Hyster Dealer has access to over 14,000 units that are available for short- or long-term rental. Whether you need one truck to substitute for a vehicle that's being serviced or several lift trucks to accommodate seasonal changes in your business, we'll help you maintain output in a cost-effective manner.

Hyster® Capital

We know that financing new additions to your fleet can sometimes be challenging. That's why your Hyster Dealer has a long list of ways for you to fund your purchase. We are skilled in arranging solutions for special financing requirements, taking the difficulties out of buying the equipment you need. Whether you purchase or lease a new or used lift truck, Hyster Capital offers better service and competitive rates, ensuring you receive the value you deserve.

Special Products Engineering Department (SPED)

In a perfect world, every application could be handled with a standard lift truck. However, in the real world, different materials require different handling. That's why Hyster Company's Special Products Engineering Department works with you to customize* your lift trucks. From strobe lights to specially made forks, SPED can provide you with the tools you require to get the job done right.

** May be subject to an additional charge. Contact your local authorized Hyster Dealer for more information.*

Automated Warehouse Solutions

As society's technological capabilities advance, we strive to find practical applications. One of our most recent innovations in that pursuit is our development of automated warehouse solutions. We can help you determine if your operation would benefit from this type of system, which improves inventory accuracy, warehouse productivity and safety records, as it reduces maintenance and overtime.

Operator and Service Training

Hyster Company recognizes that proper training is a key element of a profitable company. That's why your local authorized Hyster Dealer offers a training program for your lift truck operators as well as those who maintain your vehicles. Proper education in running and servicing lift trucks cuts down on the number of repairs and risk of injuries due to accidents while increasing productivity. All of our trainers are professionals with experience in materials handling.

HYSTER COMPANY UL REGISTERED FIRM ISO 9001:2000 A12455

HYSTER

FLEET SERVICES

UNISOURCE™

HYSTER

HYSTER CAPITAL
A Division of NMHG Financial Services, Inc.

HYSTER

Hyster Company
P.O. Box 7006
Greenville, North Carolina
27835-7006
Part No. WZCZAZR/BTG
3/2008 Litho in U.S.A.

Visit us online at www.hysteramericas.com or call us at 1-800-HYSTER-1.

Hyster and are registered trademarks of Hyster Company. UNISOURCE is a trademark of Hyster Company. Hyster products are subject to change without notice.

The Hyster Company products included in this document may be covered by U.S. Patent 6,684,148 and other patents pending. Truck on cover shown with optional equipment. ©2008 Hyster Company. All rights reserved.

SAFE OPERATORS... HYSTER BUCKLE UP