Kawasaki

HIGH-SPEED, HIGH-PERFORMANCE CLEANROOM ROBOTS

The R-Series Robots are setting the benchmark for all small to medium duty industrial robots with their compact design and industry leading speed, reach and work range. The RC05L Robot is an R-Series FED Class 100 cleanroom model designed for a wide range of application in cleanroom environments.

RC05L

Payload	5 kg
Horizontal Reach	903 mm
Vertical Reach	1,484 mm
Repeatability	±0.03 mm
Maximum Speed	9,300 mm/s

Applications

- Assembly
- Dispensing
- Inspection
- Machine Tending
- Material Handling

CLEANROOM CLASSIFICATION

The new RC05L Robot was designed for cleanroom environments and meets Class 100 of the US FED STD 209E cleanroom standards. A Class 100 cleanroom maintains less than one hundred particles larger than 0.5 microns in each cubic foot of air space. It is equivalent to ISO class 5 cleanroom.

SANITARY FEATURES

To facilitate cleaning and help prevent contamination, the RC05L Robot features an all aluminum arm cover, fluoro rubber outer seals and a chemical resistant epoxy paint finish.

WIDE WORK RANGE

In addition to extending the robot's maximum reach, the rotation range of each axis has also been increased. The extended motion range translates to a larger usable work area with minimal dead-space and greater flexibility.

HIGH TORQUE

High-output motors, combined with a rigid arm construction, allow for superior wrist torque and load capacity.

ULTRA HIGH-SPEED OPERATION

The lightweight arm and high-output high-revolution motors provide industry leading acceleration and high-speed operation. The acceleration rate automatically adjusts to suit the payload and robot posture to deliver optimum performance and the shortest cycle times.

INTEGRATED FEATURES

Built-in pneumatic lines and internal wiring are standard. Mounting pads and taps are provided to allow easy installation of additional cabling, tubing or equipment.

ENVIRONMENTAL PROTECTION

The R-Series incorporates a double-seal construction on all axes and the electrical connections are water-resistant offering an IP67 classification for wrist and IP65 for the remaining axes. If a wash-down arm is required, the entire robot can be provided as IP67.

SPACE SAVING

The slim arm design requires very little floor space. Multiple robots can be installed in "high-density" applications without impeding performance.

Kawasaki

RC05L

MOTION RANGE & DIMENSIONS

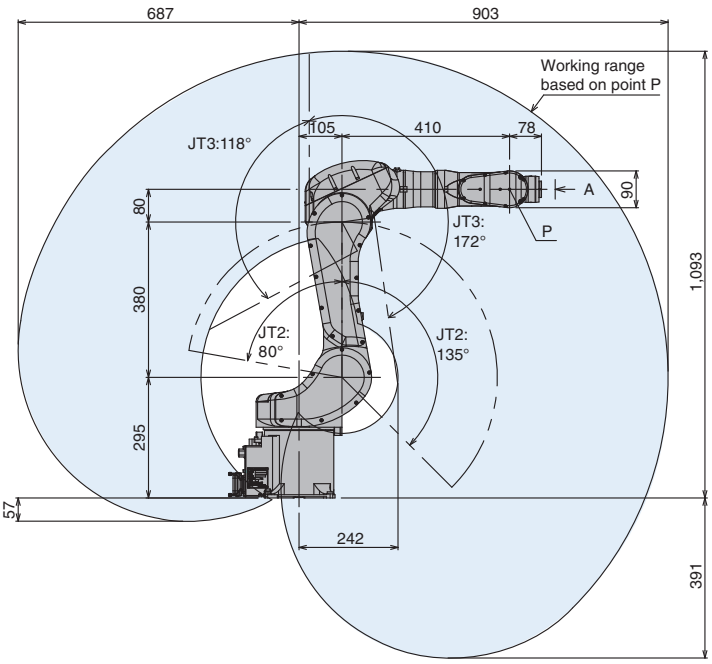

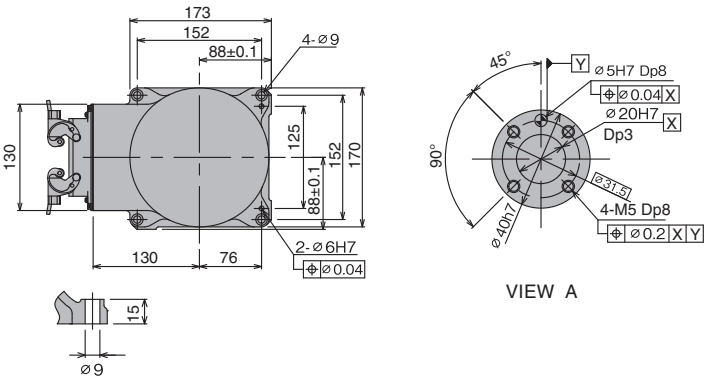

VIEW A

INSTALLATION DIMENSIONS (mm)

Note: Detailed drawings are available upon request.

RC05L SPECIFICATIONS

Type	Articulated		
Degrees of Freedom	6 axes		
Payload	5 kg		
Horizontal Reach	903 mm		
Vertical Reach	1,484 mm		
Repeatability	±0.03 mm		
Maximum Speed	9,300 mm/s		
Work Envelope (degrees) & Maximum Speed (degrees/s)	**Axis**	**Motion Range**	**Maximum Speed**
	JT1	±165°	300°/s
	JT2	+135° ~ - 80°	300°/s
	JT3	+118° ~ -172°	300°/s
	JT4	±360°	460°/s
	JT5	±145°	460°/s
	JT6	±360°	740°/s
Wrist Load Capacity	**Axis**	**Maximum Torque**	**Moment of Inertia**
	JT4	12.3 N·m	0.4 kg·m²
	JT5	12.3 N·m	0.4 kg·m²
	JT6	7.0 N·m	0.12 kg·m²
Motor(s)	Brushless AC Servomotor		
Brakes	All axes		
Hard Stop(s)	Adjustable mechanical stopper JT1		
Mass	37 kg (excluding Options)		
Body Color	Kawasaki Standard, epoxy paint		
Installation	Floor, wall, ceiling		
Environmental Conditions	Temperature	0 ~ 45° C	
	Humidity	35 ~ 85 % (no dew, nor frost allowed)	
	Vibration	Less than 0.5 G	
Protection Classification	Wrist: IP67 Base: IP65 * Equivalent		
Built-in Harness	Sensor harness 12 inputs, 24VDC, GND		
Built-in Utilities	Pneumatic piping (ø6 x 2 lines)		
Options	IP67 entire arm Riser (300/600 mm) Base plate Double/single solenoid valves (3 units max.) Air cleaning equipment (filter, regulator, mist separator)		
Controller	E77 (see E Controller data sheet for specifications)		

Simple and friendly

Assembly • Cutting • Dispensing • Grinding • Handling • Inspection • Packaging • Painting • Palletizing • Polishing • Tending • Welding

Kawasaki Robotics (USA), Inc.

United States
28140 Lakeview Drive
Wixom, Michigan 48393
Phone (248) 446-4100
Email sales@kri-us.com

Canada
Phone (905) 304-7784

Mexico
Phone (52) 33-3110-1895

www.kawasakirobotics.com

RC05L - REV11/12
© Kawasaki Robotics (USA), Inc. All rights reserved.
Technical specifications subject to change without notice.