Mikron TR-42/2

MIKRON

Wire cutting Machine

Mikron TR-42/2

Machine for economical and straight shearing of wire material

Technical Data

Motor	
0.75kW	
240 / 400 V	
50/60 Hz	
Provided with a variable frequency drive	

Coil dimension	
Coil diameter	internal from 450 to 550mm
	external from 650 to 750mm
Maximum weight 50kg	

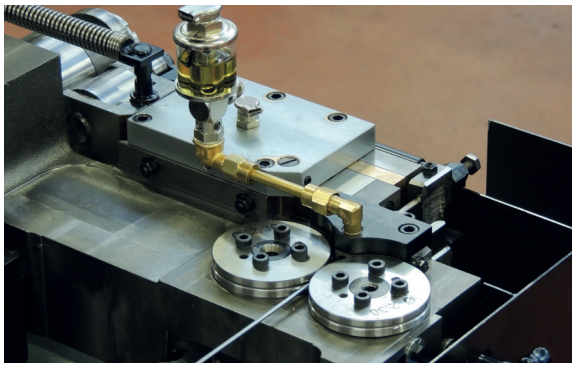

Feeding mechanism

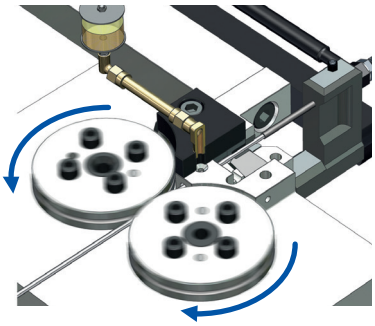

Advancement of the wire

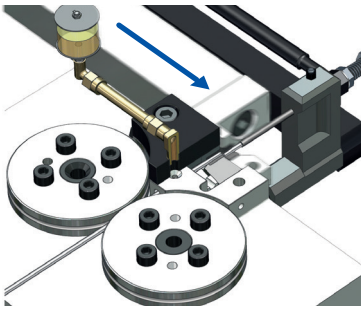

Movement of the die

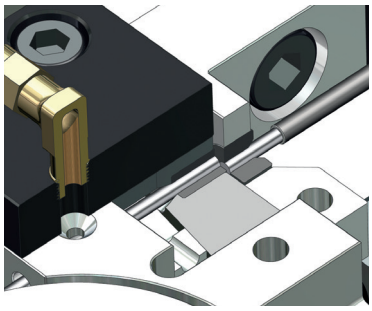

Cutting of the wire

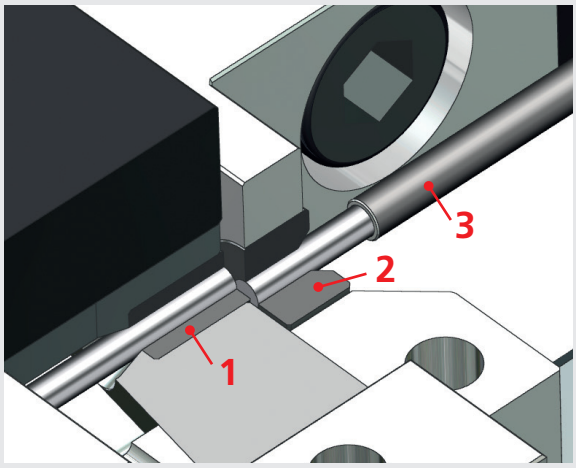

Cutting mechanism detail

1. Tungsten carbide guiding die
2. Movable tungsten carbide cutting die
3. Movable stop for adjustment of lenght

CE **Conformity**

Production

Output rate
150 – 800 Pcs / min

Capacity	
Alu	Ø 5mm
Brass	Ø 5mm
Copper	Ø 5mm
Steel	Ø 3mm

Cutting lenght
from 1mm to 35mm (3 different types of cams needed)

Cutting accuracy
± 0.05mm

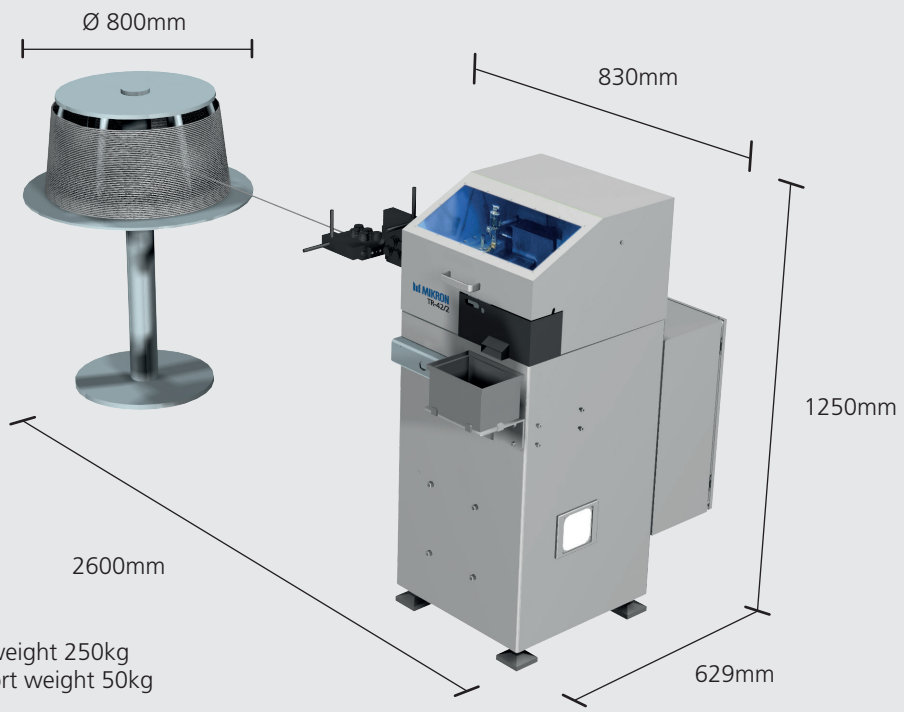

Machine weight 250kg
Coil support weight 50kg

MIKRON

Mikron Machining
Your contacts

Headquarter
Mikron SA Agno
Via Ginnasio 17
CH-6982 Agno
Tel. +41 91 610 61 11
Fax +41 91 610 66 80
mag@mikron.com

Mikron Tool SA Agno
Via Campagna 1
CH-6984 Bioggio
Tel. +41 91 610 40 00
Fax +41 91 610 40 10
mto@mikron.com

Mikron GmbH Rottweil
Berner Feld 71
D-78628 Rottweil
Tel. +49 741 5380 0
Fax +49 741 5380 580
mro@mikron.com

Mikron SAS Nerviano
Via S. Ambrogio 16
I-20015 Parabiago (MI)
Tel. +39 0331 55 12 22
Fax +39 0331 55 12 86
mnv@mikron.com

Mikron Corp. Monroe
200 Main Street
P.O. Box 268
Monroe, CT 06468 / USA
Tel. +1 203 261 31 00
Fax +1 203 268 47 52
mmo@mikron.com

Mikron Taiwan Office
P.O. Box 91-251
Taipei, Taiwan R.O.C.
Tel. +886 2 2231 07 07
Fax +886 2 2231 01 07
mtw@mikron.com

Certified Management System
SQS
ISO 9001 / ISO 14001 / OHSAS 18001

Available on App Store

www.youtube.com/mikrongroup
www.mikron.com

Mikron® is a trademark of Mikron Holding AG, Biel (Switzerland)
Pictures and colours of the products here included are samples

0114