INTRODUCING
THE NEW VM SERIES.
REINVENTED FROM THE GROUND UP.

MILLTRONICS USA®
LET'S INVENT

WHY MILLTRONICS? 10 REASONS.

1. EASY TO USE CONTROL

The Milltronics CNC control is straightforward and easy-to-use. Whether you choose Conversational programming, industry standard G&M code or use a CAD/CAM system, the 9000 CNC gives you the flexibility to use the most efficient program for each part.

2. MADE RIGHT

Using a machine design process that is ISO 9001 certified, Milltronics starts with FEA analysis and designs accurate, rigid and reliable machines built to last. There are no shortcuts taken here.

3. SUPERIOR COMPONENTS

Milltronics partners with top suppliers such as Yaskawa, Kenturn, Hiwin® and Grundfos. You can judge a machine tool builder by the company it keeps.

4. UPGRADEABLE

Milltronics controls are designed, built and supported by Milltronics. They are also designed to be upgradeable. With Milltronics CNC controls, you don't have to miss out on new software or hardware advancements as time marches on.

5. AVAILABILITY

We recognize that sometimes you need a machine fast. We work hard to make sure we have our most popular models in stock for quick shipment.

6. FASTEST LEARNING CURVE

Because Milltronics machines are so easy to learn and use, you'll be making chips quicker. But don't confuse easy with simple – the 9000 CNC is packed with advanced features and capabilities. Conversational programming, on screen help, intuitive menus, color graphics and prompted tool settings will help the operator train faster and become productive sooner.

7. SERVICE NETWORK

Support is a core value to Milltronics, and according to customer surveys Milltronics and our distributor network offer the best service and support in the industry. We do what it takes to provide reliable full life-cycle support you need to make great products.

8. COMPLETE SOLUTION

Milltronics offers 50 different models of milling and turning machines for toolroom and production environments. The lineup includes toolroom mills and lathes, general purpose and high performance vertical machining centers, CNC lathes, bridge mills and horizontal boring mills. Our versatile product line offers something for everyone.

9. GLOBAL AMERICAN COMPANY

Milltronics is part of the Hurco Companies Machine Tool Group. We are publicly traded with solid financials, we're in it for the long haul.

10. MORE FOR YOUR MONEY

Finally, Milltronics offers better built machines with more standard features for the price. We are continually working with our distribution partners innovating new ways to seamlessly surround manufacturers and machine shop owners with the reliable products they need.

THE NEW VM M

MACHINE SERIES

The new VM Series of vertical machining centers are built with the capacity, reliability and features you need to build great products. The VM Series is designed for a variety of applications and are equipped with the new touch-screen 9000 Series CNC control which allow operators to be more flexible, efficient and productive while machining at higher speeds and tighter tolerances.

INTUITIVE. EFFICIENT. PRODUCTIVE.

SUPPORT ONE

MILLTRONICS USA
LET'S INVENT

WHO WE ARE

Milltronics is a growing manufacturer of CNC machines designed for the metal cutting industry. We manufacture over 50 models of machines and our own CNC. With more than 70 employees operating out of a 100,000 sq. ft. state-of-the-art facility in a suburb of Minneapolis, Minnesota, Milltronics is an industry leader in advanced CNC technology. We offer customers increased productivity with our innovative concept of a powerful CNC control with an easy-to-use operator interface designed around quality-built machine tools for a global market.

9000 CNC

9000 CNC: THE NEW STANDARD OF CONTROL.

Milltronics is constantly refining our controls to simplify operation, shorten setup times and to provide set features to reduce cycle times. The 9000 Series CNC is our newest and upgraded control offered on VM milling series. It features 120 GB disk storage, 4GB memory, mid-travel tactile keys and an enlarged 15" LCD touch screen. It's a Windows®-based platform and offers all the user-friendly features that Milltronics CNC controls are known for and more.

INTUITIVE

With its conversational programming, on screen help, intuitive menus, color graphics and prompted tool settings, the 9000 CNC helps new operators train faster and become more productive sooner. The 9000 CNC makes it the one machine in the shop that everyone can operate.

EFFICIENT

The 9000 CNC is packed with features that allow quick and confident operation of the CNC:

- **Solid modeling graphics allows the operator to see a completed part prior to cutting.**
- **Mid program restart allows the operator to start anywhere in a program by verifying the graphics and then switching to Run Mode. It's simple – no need for G&M code expertise!**
- **Handwheel run allows the operator to run a program in a controlled mode where motion only occurs while the handwheel is turning. This feature allows operators to verify programs with total control and complete confidence.**
- **The 9000 CNC features a dual-core processor and high speed motion control that is capable of executing 3,000 blocks per second. Execute the most demanding programs in the shortest time.**
- **The 9000 CNC is equipped with a 120 GB solid state drive, 4 GB RAM memory, USB ports and Ethernet connectivity.**

PRODUCTIVE

The 9000 CNC allows operators to run parts conversationally or toolpaths generated by a CAM system. Coupled with a super-fast motion control system, feature packed CNC and interface designed to expedite setup and operation, the 9000 CNC is the solution to helping your operator make parts faster and better.

PERFORMANCE & SPECIFICATIONS

Essentials

Processor	Intel® Core i5-3610ME
Instruction Set	64-bit

Performance

Number of Cores	2
Processor Base Frequency	2.7 GHz
Max Turbo Frequency	3.3 GHz

Memory Specifications

System Memory Installed	4 GB
Disk Storage	120 GB

Graphics Specifications

GPU Core Speed	600MHz
Memory	1024

Operating System

Primary OS	Windows® Embedded 7
Real Time Extension	Interval Zero RTX

The new Milltronics 9000 CNC control is Windows® based and features a 15" color LCD touch screen.

Display

Size	15"
Resolution	1024 x 768
Backlight Type	LED
Touchscreen	Resistive

Operator Panel

Keypad Type	ABS mid-travel with tactile feedback
Data Transfer	USB ports and Ethernet connectivity

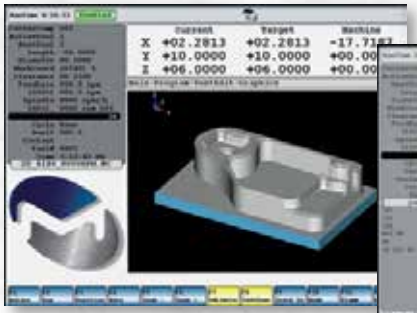

3D Solid Model Graphics

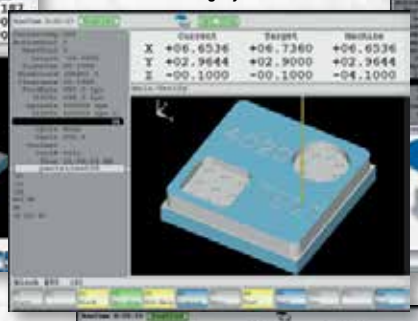

Lettering Cycles

Enhanced Tool Table with Graphic Tool Representation

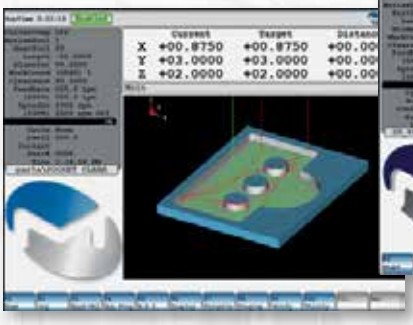

Irregular Pocket Clearing with Islands

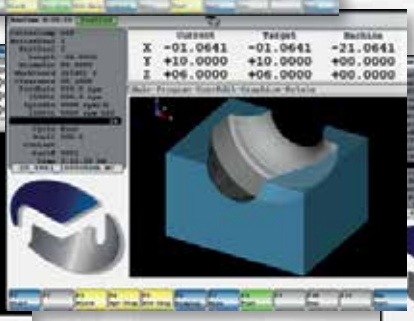

Sweep Pocket Clearing Cycles

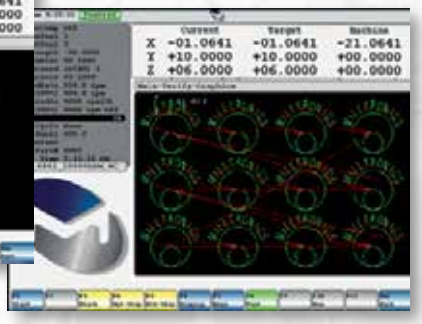

Sub-program Loops for Pattern Repeat Cycles

PROGRAMMING FEATURES

- Absolute / Incremental
- Inch / Metric
- Conversational Programming
- Trigonometry Assist (Trig Help)
- Corner Chamfering and Rounding
- Cutter Compensation
- Color Graphics – Tool Path and Part Profile
- Canned Drilling Cycles
- Remote Diagnostics
- Excess Error Protection
- Full Language Error Messages
- Backlash Compensation
- Ball Screw Pitch Error Correction
- Mirror, Scale and Rotate
- EIA / ISO Code (Fanuc™) Compatibility
- Macro Programming
- Subprogram Looping and Nesting
- 3 Point Circular Interpolation
- Polar Coordinates
- Auto / Block Operation
- Programmable Dwell
- Block Skip
- Concurrent Programming
- Rigid Tapping
- Probe Ready
- Parts Counter
- Program Halt and Resume
- Graphics Based Mid Program Start
- Program Start From Block or Tool Number
- Handwheel Run
- Feed Forward Error Correction
- Machine Dynamics Selection
- Selectable Corner Accuracy
- Automatic Homing
- Circular Interpolation
- Axis Jog
- Software Limits
- Unidirectional Approach
- Dry Run
- Automatic Tool Setting Program
- Selectable Languages
- Multiple Work Offsets
- 1 Button Tool / Fixture Offset Entry
- 8 MB Text Editing with Cut, Copy, Move and Search – Replace
- Pocketing and Framing Cycles
- Tapered and Round Walls
- 3D Sweep Routine
- Helical Interpolation
- Bolt Hole Drill Cycles
- Engraving with Serializing
- Speed and Feed Calculator
- Prompting Help Screens
- Auxiliary Keyboard Jack USB
- Spindle Load Meter
- True Spindle Speed Feedback (RPM)
- Networking
- Electronic Handwheel
- Verify to Run Online
- Irregular Pocket Clear with Islands
- Text Engraving Along Arc
- Slot Cycle
- Polygon Cycle
- Incremental Jog
- Remote Handwheel
- Solid Model Graphics
- Onboard Calculator (Numeric)
- 100% Rapid Override Select
- 10% Rapid Override Select
- Thread Milling Cycle
- CAD File Import for Mill and Drill Cycles (DXF Import)
- Tangent Line and Arc Geometry
- Handwheel Scroll through Menus
- Custom Drill Cycle
- System Shell Allows Access to Windows Support Utilities
- Mill Away / Jog Away
- Math Function Input Fields
- Custom Conversational Screens
- Macro Variable Programming in Conversational
- Custom I/O Screens

VM2515

MACHINE SPECIFICATIONS

CAPACITY	
Travels	25 x 15 x 20″ (635 x 381 x 508 mm)
Table Size	30 x 16″ (762 x 406 mm)
Allowable Table Load	1500 lbs. (682 kg)
T-Slot Size	.71″ (18 mm)
SPINDLE	
Spindle Nose To Table Distance	4-24″ (101-610 mm)
Column To Spindle Center	16″ (406 mm)
Spindle Taper	BIG-PLUS® ISO No. 40
Spindle Speed	10,000 RPM
AC Spindle Motor	15/10 HP (11/7.5 kW)
Spindle Torque	54 ft-lbs (73 N.m)
AUTOMATIC TOOL CHANGER	
Number of Tools	20 Double Arm
Tool Shank	CT40
Pull Stud	MAS 60° Retention Knob Style CT-Flange
Max. Tool Diameter	3.5″ (89 mm)
Max. Tool Length	9.8″ (250 mm)
Max. Tool Weight	15 lbs. (7 kg)
MOTION	
XY, Z Axis Rapid Traverse Rate	945 IPM (24 m/min)
Max. Cutting Feed Rate	500 IPM (12.7 m/min)
Least Command Increment	0.0001″ (0.001 mm)
Positioning Accuracy	+/- 0.0001″ (+/- 0.003 mm)
Axis Thrust Force XY,Z	1735/2884 lbs (787/1308 kg)
GENERAL	
Machine Height	101″ (2565 mm)
Floor Space Required (W x D)	76 x 101″ (1906 x 2553 mm)
Machine Weight	6,200 lbs. (2818 kg)
Power Required	16 KVA / 40 Amps
Voltage Required	208-240 Volts / 3 Phase

VM2515 machine shown with options

MACHINE FEATURES

MACHINE STANDARDS

- Heavily ribbed one piece fine grain cast iron construction
- Fully enclosed machine guard with side doors
- 30/35 mm linear way technology
- Precision ground anchored double nut ball screws
- Precision ground table surface
- Telescopic metal way covers
- 20 pocket double arm ATC
- BIG-PLUS® dual contact spindle
- Automatic positive displacement lubrication system
- High torque AC digital servo drives
- High torque closed loop vector spindle drive system
- Work light (right side)
- LCD hour meter
- Spindle taper blow-out and tool release push button
- Single spare “M” function with CNC “wait” channel
- Programmable on/off flood coolant system
- Rigid tap
- Edit key lockout switch
- Spindle load meter
- Feedrate and spindle speed overrides
- Spindle air purge
- End of cycle light

MACHINE OPTIONS

- Coolant through spindle system (300 psi)
- Part and tool probes
- 4th axis options
- Chip auger chip removal system
- Lift up chip conveyor chip removal system
- Remote handwheel
- Auxiliary industrial grade keyboard
- Electronic spindle chiller
- Air gun
- Coolant wash down gun
- Additional work light (left side)
- BT tooling

VM3018

MACHINE SPECIFICATIONS

CAPACITY	
Travels	30 x 18 x 20″ (762 x 457 x 508 mm)
Table Size	34 x 18″ (864 x 457 mm)
Allowable Table Load	1750 lbs. (794 kg)
T-Slot Size	.71″ (18 mm)
SPINDLE	
Spindle Nose To Table Distance	4-24″ (101-610 mm)
Column To Spindle Center	20.25″ (514 mm)
Spindle Taper	BIG-PLUS® ISO No. 40
Spindle Speed	10,000 RPM
AC Spindle Motor	20/15 HP (15/11 kW)
Spindle Torque	75 ft-lbs (102 N.m)
AUTOMATIC TOOL CHANGER	
Number of Tools	20 Double Arm
Tool Shank	CT40
Pull Stud	MAS 60° Retention Knob Style CT-Flange
Max. Tool Diameter	3.5″ (89 mm)
Max. Tool Length	9.8″ (250 mm)
Max. Tool Weight	15 lbs. (7 kg)
MOTION	
XY, Z Axis Rapid Traverse Rate	945 IPM (24 m/min)
Max. Cutting Feed Rate	500 IPM (12.7 m/min)
Least Command Increment	0.0001″ (0.001 mm)
Positioning Accuracy	+/- 0.0001″ (+/- 0.003 mm)
Axis Thrust Force XY,Z	3765/2884 lbs (1707/1308 kg)
GENERAL	
Machine Height	102″ (2570 mm)
Floor Space Required (W x D)	93 x 110″ (2351 x 2777 mm)
Machine Weight	9000 lbs. (4100 kg)
Power Required	20 KVA / 50 Amps
Voltage Required	208-240 Volts / 3 Phase

VM3018 machine shown with options

MACHINE FEATURES

MACHINE STANDARDS

- Heavily ribbed one piece fine grain cast iron construction
- Fully enclosed machine guard with side doors
- 35/45 mm linear way technology
- Precision ground anchored double nut ball screws
- Precision ground table surface
- Telescopic metal way covers
- 20 pocket double arm ATC
- BIG-PLUS® dual contact spindle
- Automatic positive displacement lubrication system
- High torque AC digital servo drives
- High torque closed loop vector spindle drive system
- Work light (right side)
- LCD hour meter
- Spindle taper blow-out and tool release push button
- Single spare “M” function with CNC “wait” channel
- Programmable on/off flood coolant system
- Rigid tap
- Edit key lockout switch
- Spindle load meter
- Feedrate and spindle speed overrides
- Spindle air purge
- End of cycle light

MACHINE OPTIONS

- Coolant through spindle system (300 psi)
- Part and tool probes
- 4th axis options
- Chip auger chip removal system
- Lift up chip conveyor chip removal system
- Remote handwheel
- Auxiliary industrial grade keyboard
- Electronic spindle chiller
- Air gun
- Coolant wash down gun
- Additional work light (left side)
- BT tooling

VM4020

MACHINE SPECIFICATIONS

CAPACITY	
Travels	40 x 20 x 20″ (1016 x 508 x 508 mm)
Table Size	46 x 20″ (1168 x 508 mm)
Allowable Table Load	2000 lbs. (907 kg)
T-Slot Size	.71″ (18 mm)
SPINDLE	
Spindle Nose To Table Distance	4-24″ (101-610 mm)
Column To Spindle Center	20.5″ (521 mm)
Spindle Taper	BIG-PLUS® ISO No. 40
Spindle Speed	10,000 RPM
AC Spindle Motor	20/15 HP (15/11 kW)
Spindle Torque	75 ft-lbs (102 N.m)
AUTOMATIC TOOL CHANGER	
Number of Tools	20 Double Arm
Tool Shank	CT40
Pull Stud	MAS 60° Retention Knob Style CT-Flange
Max. Tool Diameter	3.5″ (89 mm)
Max. Tool Length	9.8″ (250 mm)
Max. Tool Weight	15 lbs. (7 kg)
MOTION	
XY, Z Axis Rapid Traverse Rate	945 IPM (24 m/min)
Max. Cutting Feed Rate	500 IPM (12.7 m/min)
Least Command Increment	0.0001″ (0.001 mm)
Positioning Accuracy	+/- 0.0001″ (+/- 0.003 mm)
Axis Thrust Force XY,Z	3765/2884 lbs (1707/1308 kg)
GENERAL	
Machine Height	102″ (2570 mm)
Floor Space Required (W x D)	100 x 110″ (2537 x 2777 mm)
Machine Weight	9100 lbs. (4125 kg)
Power Required	20 KVA / 50 Amps
Voltage Required	208-240 Volts / 3 Phase

VM4020 machine shown with options

MACHINE FEATURES

MACHINE STANDARDS

- Heavily ribbed one piece fine grain cast iron construction
- Fully enclosed machine guard with side doors
- 35/45 mm linear way technology
- Precision ground anchored double nut ball screws
- Precision ground table surface
- Telescopic metal way covers
- 20 pocket double arm ATC
- BIG-PLUS® dual contact spindle
- Automatic positive displacement lubrication system
- High torque AC digital servo drives
- High torque closed loop vector spindle drive system
- Work light (right side)
- LCD hour meter
- Spindle taper blow-out and tool release push button
- Single spare “M” function with CNC “wait” channel
- Programmable on/off flood coolant system
- Rigid tap
- Edit key lockout switch
- Spindle load meter
- Feedrate and spindle speed overrides
- Spindle air purge
- End of cycle light

MACHINE OPTIONS

- Coolant through spindle system (300 psi)
- Part and tool probes
- 4th axis options
- Chip auger chip removal system
- Lift up chip conveyor chip removal system
- Remote handwheel
- Auxiliary industrial grade keyboard
- Electronic spindle chiller
- Air gun
- Coolant wash down gun
- Additional work light (left side)
- BT tooling

VM5020

MACHINE SPECIFICATIONS

CAPACITY	
Travels	50 x 20 x 20″ (1270 x 508 x 508 mm)
Table Size	52 x 20″ (1321 x 508 mm)
Allowable Table Load	2000 lbs. (907 kg)
T-Slot Size	.71″ (18 mm)
SPINDLE	
Spindle Nose To Table Distance	4-24″ (101-610 mm)
Column To Spindle Center	20.5″ (571 mm)
Spindle Taper	BIG-PLUS® ISO No. 40
Spindle Speed	10,000 RPM
AC Spindle Motor	20/15 HP (15/11 kW)
Spindle Torque	75 ft-lbs (102 N.m)
AUTOMATIC TOOL CHANGER	
Number of Tools	20 Double Arm
Tool Shank	CT40
Pull Stud	MAS 60° Retention Knob Style CT-Flange
Max. Tool Diameter	3.5″ (89 mm)
Max. Tool Length	9.8″ (250 mm)
Max. Tool Weight	15 lbs. (7 kg)
MOTION	
XY, Z Axis Rapid Traverse Rate	945 IPM (24 m/min)
Max. Cutting Feed Rate	500 IPM (12.7 m/min)
Least Command Increment	0.0001″ (0.001 mm)
Positioning Accuracy	+/- 0.0001″ (+/- 0.003 mm)
Axis Thrust Force XY,Z	3765/2884 lbs (1707/1308 kg)
GENERAL	
Machine Height	102″ (2570 mm)
Floor Space Required (W x D)	112 x 110″ (2828 x 2777 mm)
Machine Weight	9400 lbs. (4270 kg)
Power Required	20 KVA / 50 Amps
Voltage Required	208-240 Volts / 3 Phase

VM5020 machine shown with options

MACHINE FEATURES

MACHINE STANDARDS

- Heavily ribbed one piece fine grain cast iron construction
- Fully enclosed machine guard with side doors
- 35/45 mm linear way technology
- Precision ground anchored double nut ball screws
- Precision ground table surface
- Telescopic metal way covers
- 20 pocket double arm ATC
- BIG-PLUS® dual contact spindle
- Automatic positive displacement lubrication system
- High torque AC digital servo drives
- High torque closed loop vector spindle drive system
- Work light (right side)
- LCD hour meter
- Spindle taper blow-out and tool release push button
- Single spare “M” function with CNC “wait” channel
- Programmable on/off flood coolant system
- Rigid tap
- Edit key lockout switch
- Spindle load meter
- Feedrate and spindle speed overrides
- Spindle air purge
- End of cycle light

MACHINE OPTIONS

- Coolant through spindle system (300 psi)
- Part and tool probes
- 4th axis options
- Chip auger chip removal system
- Lift up chip conveyor chip removal system
- Remote handwheel
- Auxiliary industrial grade keyboard
- Electronic spindle chiller
- Air gun
- Coolant wash down gun
- Additional work light (left side)
- BT tooling

QUALITY COMPONENTS

VM FRAME

- Heavily ribbed and support fine grain cast iron optimized with Finite Element Analysis (FEA) provides superior dampening characteristics and added rigidity for heavy machining applications.
- Oversized and widely spaced linear rails increase rigidity and ensure geometric accuracies during heavy load conditions.
- 10,000 RPM grease packed spindle cartridge using ABEC Class 7 bearings is air purged to eliminate contaminants in the spindle and provided excellent cutting performance.
- Preloaded double nut ball screws anchored at both ends reduces backlash with high inertial loads and fast rapid traverse rates.
- Automatic lubrication is provided by an electric positive displacement pump with metered lines to each lubrication point ensuring proper lubrication of ball screws and linear rails.

VM4020 Frame

BALL SCREWS AND LINEAR GUIDES

The VM Series of machines feature Hiwin® premium grade double-nut pre-loaded ball screws, anchored at both ends as well as Hiwin® linear motion guides.

The double-nut ball screws apply pressure in opposite directions to the ball screw which keeps the nut under tension and prevents backlash.

The linear motion guides provide excellent rigidity during heavy cutting with very low friction characteristics. This also helps with the higher feed rates of 3D cutting.

Milltronics castings are machined with slot and shoulder for rail. The rail is then wedged with a fastener to ensure straightness and rigidity.

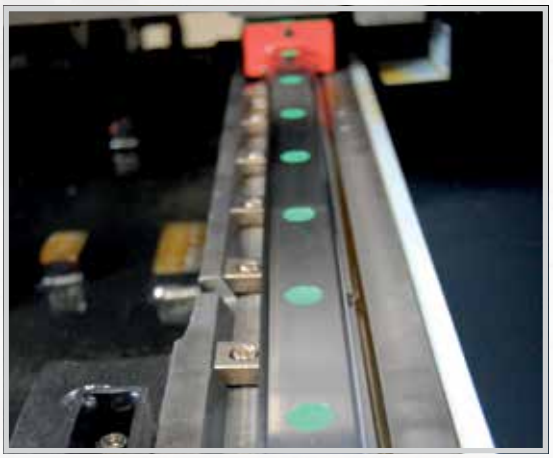

To ensure straightness and rigidity, Milltronics rails are fastened with wedge blocks to a machined shoulder.

LASER INTERFEROMETER

After assembly, Milltronics VM machines are tested, including the use of a laser interferometer. The laser interferometer provides comprehensive accuracy assessment of machine alignment and any roll-pitch-yaw errors in machine.

BIG-PLUS® greatly improves rigidity by simultaneous fit of taper and face which results in improved heavy or high speed cutting and deep or large diameter boring. It also extends the tool life.

VM SPINDLES

VM Series spindles are designed by Milltronics and manufactured in a clean room environment that is temperature and humidity controlled. Features of the spindle include:

- BIG-PLUS® dual contact
- Larger diameter for rigidity
- Made of chrome-molly alloy for longer wear & corrosion prevention
- ABEC 7 precision class angular contact bearings
- Permanently grease packed
- Air purged top and bottom to prevent contamination
- Precision balanced for long life

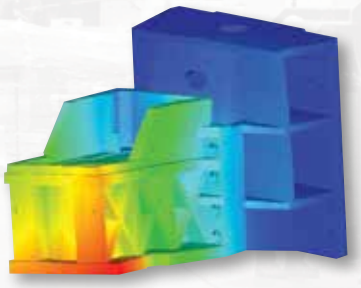

FINITE ELEMENT ANALYSIS

Finite Element Analysis (FEA) is used to evaluate structural rigidity, torsional stiffness, thermal characteristics and natural frequency to achieve the best frame design. This is critical with today's high velocities and accelerations – machine performance must be carefully optimized in order to maintain part quality.

SERVOS AND DRIVES

Milltronics uses state-of-the-art premium servos and drives from Yaskawa, the world's largest manufacturer of motors and drives. Some of the features of the Yaskawa drives include:

- Yaskawa Sigma V digital drives .625 millisecond velocity loop frequency response time (1.6 kHz)
- Encoders: 1,048,576 pulses per revolution
- Enhanced vibration suppression – delivers 5G resistance
- Higher speed acceleration and deceleration

SWING ARM ATC

Milltronics uses electric swing arm automatic tool changers on the VM Series. The ATC is bi-directional random pot, features 20 stations and is side mounted on the column.

Tool-to-tool change time is 2.5 seconds with the standard swing arm ATC.

ITX TECHNOLOGY

The modular design of the ITX rack provides highly reliable CNC operation as it uses fewer parts and features reduced connections. The CPU module uses less power and runs cooler for dependable operation.

SPEC OVERVIEW

	SPECIFICATIONS	VM2515	VM3018	VM4020	VM5020
CAPACITY	TRAVELS	25 x 15 x 20″ (635 x 381 x 508 mm)	30 x 18 x 20″ (762 x 457 x 508 mm)	40 x 20 x 20″ (1016 x 508 x 508 mm)	50 x 20 x 20″ (1270 x 508 x 508 mm)
	TABLE SIZE	30 x 16″ (762 x 406 mm)	34 x 18″ (864 x 457 mm)	46 x 20″ (1168 x 508 mm)	52 x 20″ (1321 x 508 mm)
	ALLOWABLE TABLE LOAD	1500 lbs. (682 kg)	1750 lbs. (794 kg)	2000 lbs. (907 kg)	2000 lbs. (907 kg)
	T-SLOT SIZE	.71″ (18 mm)	.71″ (18 mm)	.71″ (18 mm)	.71″ (18 mm)
	NUMBER OF T-SLOTS	3	4	5	5
	DISTANCE	3.94″ (100 mm)	3.94″ (100 mm)	3.94″ (100 mm)	3.94″ (100 mm)
SPINDLE	SPINDLE NOSE TO TABLE DISTANCE	4–24″ (101–610 mm)	4–24″ (101–610 mm)	4–24″ (101–610 mm)	4–24″ (101–610 mm)
	COLUMN TO SPINDLE CENTER	16″ (406 mm)	20.25″ (514 mm)	20.5″ (521 mm)	20.5″ (521 mm)
	SPINDLE TAPER	BIG-PLUS® ISO No. 40	BIG-PLUS® ISO No. 40	BIG-PLUS® ISO No. 40	BIG-PLUS® ISO No. 40
	SPINDLE SPEED	10,000 RPM	10,000 RPM	10,000 RPM	10,000 RPM
	AC SPINDLE MOTOR	15/10 HP (11/7.5 kW)	20/15 HP (15/11 kW)	20/15 HP (15/11 kW)	20/15 HP (15/11 kW)
	SPINDLE TORQUE	54 ft-lbs (73 N.m)	75 ft-lbs (102 N.m)	75 ft-lbs (102 N.m)	75 ft-lbs (102 N.m)
ATC	NUMBER OF TOOLS	20 Double Arm	20 Double Arm	20 Double Arm	20 Double Arm
	TOOL SHANK	CT40	CT40	CT40	CT40
	PULL STUD	MAS 60° Retention Knob Style CT-Range	MAS 60° Retention Knob Style CT-Range	MAS 60° Retention Knob Style CT-Range	MAS 60° Retention Knob Style CT-Range
	MAXIMUM TOOL DIAMETER	3.5″ (89 mm)	3.5″ (89 mm)	3.5″ (89 mm)	3.5″ (89 mm)
	MAXIMUM TOOL LENGTH	9.8″ (250 mm)	9.8″ (250 mm)	9.8″ (250 mm)	9.8″ (250 mm)
	MAXIMUM TOOL WEIGHT	15 lbs. (7 kg)	15 lbs. (7 kg)	15 lbs. (7 kg)	15 lbs. (7 kg)
MOTION	XY, Z AXIS RAPID TRAVERSE RATE	945 IPM (24 m/min)	945 IPM (24 m/min)	945 IPM (24 m/min)	945 IPM (24 m/min)
	MAXIMUM CUTTING FEED RATE	500 IPM (12.7 m/min)	500 IPM (12.7 m/min)	500 IPM (12.7 m/min)	500 IPM (12.7 m/min)
	LEAST COMMAND INCREMENT	0.0001″ (0.001 mm)	0.0001″ (0.001 mm)	0.0001″ (0.001 mm)	0.0001″ (0.001 mm)
	POSITIONING ACCURACY	+/- 0.0001″ (+/- 0.003 mm)	+/- 0.0001″ (+/- 0.003 mm)	+/- 0.0001″ (+/- 0.003 mm)	+/- 0.0001″ (+/- 0.003 mm)
	AXIS THRUS FORCE XY, Z	1735/2884 lbs (787/1308 kg)	3765/2884 lbs (1707/1308 kg)	3765/2884 lbs (1707/1308 kg)	3765/2884 lbs (1707/1308 kg)
GENERAL	MACHINE HEIGHT	101″ (2565 mm)	102″ (2570 mm)	102″ (2570 mm)	102″ (2570 mm)
	FLOOR SPACE REQUIRED WIDTH	76″ (1906 mm)	93″ (2351 mm)	100″ (2537 mm)	112″ (2828 mm)
	FLOOR SPACE REQUIRED DEPTH	101″ (2553 mm)	110″ (2777 mm)	110″ (2777 mm)	110″ (2777 mm)
	MACHINE WEIGHT	6,200 lbs. (2818 kg)	9000 lbs. (4100 kg)	9100 lbs. (4125 kg)	9400 lbs. (4270 kg)
	POWER REQUIRED	16 KVA/40 Amps	20 KVA/50 Amps	20 KVA/50 Amps	20 KVA/50 Amps
	VOLTAGE REQUIRED	208–240 Volts/3 Phase	208–240 Volts/3 Phase	208–240 Volts/3 Phase	208–240 Volts/3 Phase

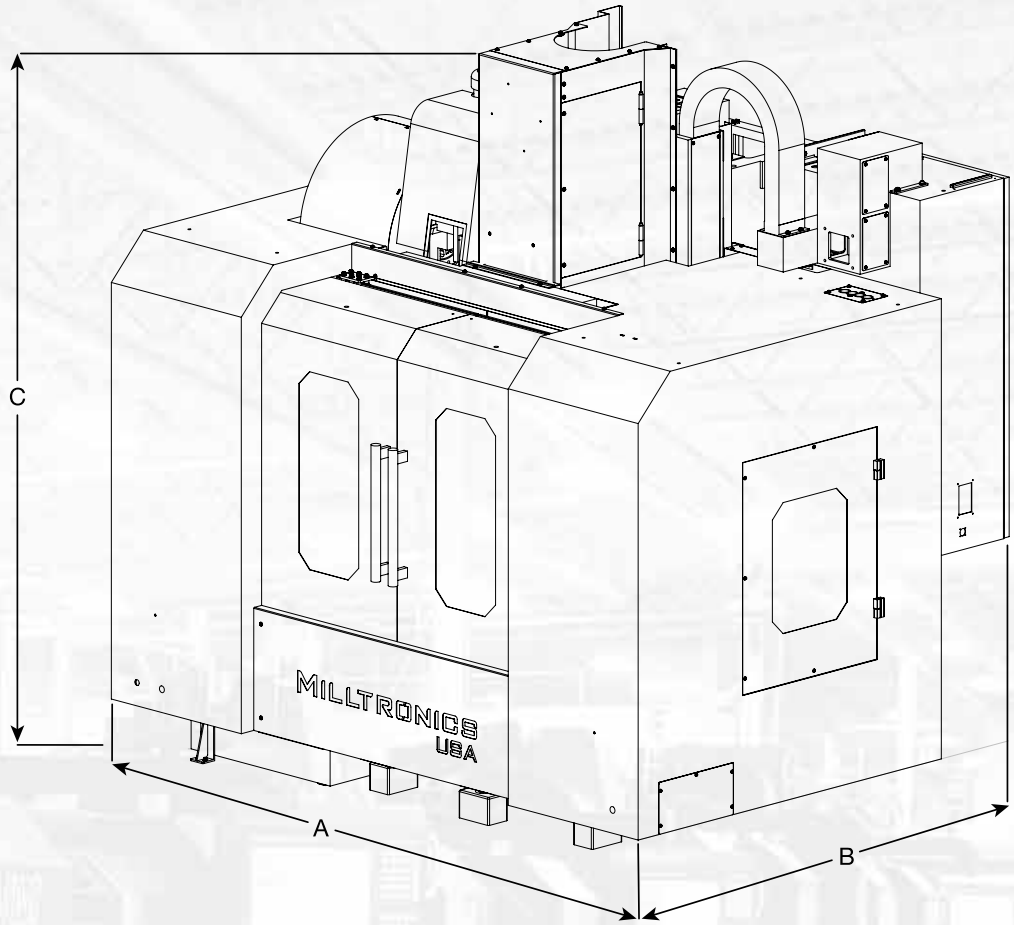

FOOTPRINT DIMENSIONS

MODEL	A (Width)	B (Depth)	C (Height)
VM2515	76″ (1906 mm)	101″ (2553 mm)	101″ (2565 mm)
VM3018	93″ (2351 mm)	110″ (2777 mm)	102″ (2570 mm)
VM4020	100″ (2537 mm)	110″ (2777 mm)	102″ (2570 mm)
VM5020	112″ (2828 mm)	110″ (2777 mm)	102″ (2570 mm)

Note: some options may change floor space requirements.

OPTIONAL ACCESSORIES

- Coolant thru spindle (300 psi)
- Programmable spray mist
- Programmable air blast
- Washdown gun
- Air gun
- Additional worklight (left side)
- BT tooling
- Chip augers or chip conveyors
- Spindle chiller
- Rotary tables
- Tool and part probes
- Auxiliary keyboard
- Remote jog

SINGLE TORQUE AND HORSEPOWER CHARTS

VM2515 SPINDLE TORQUE / HORSEPOWER CHART

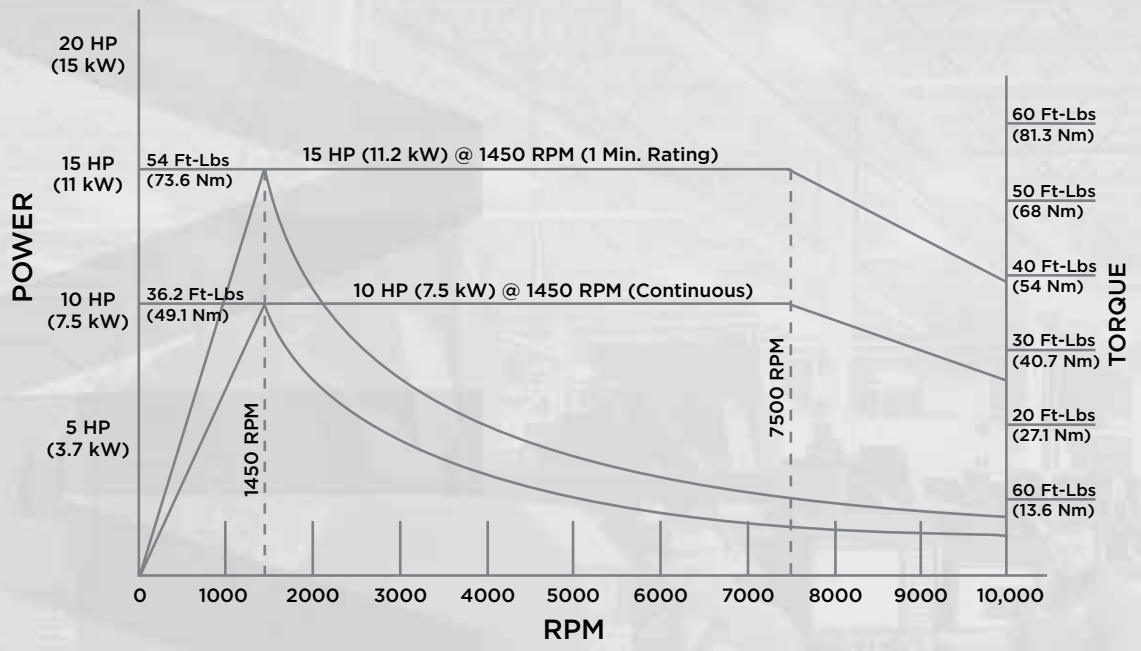

VM3018, VM4020 & VM5020 SPINDLE TORQUE / HORSEPOWER CHART

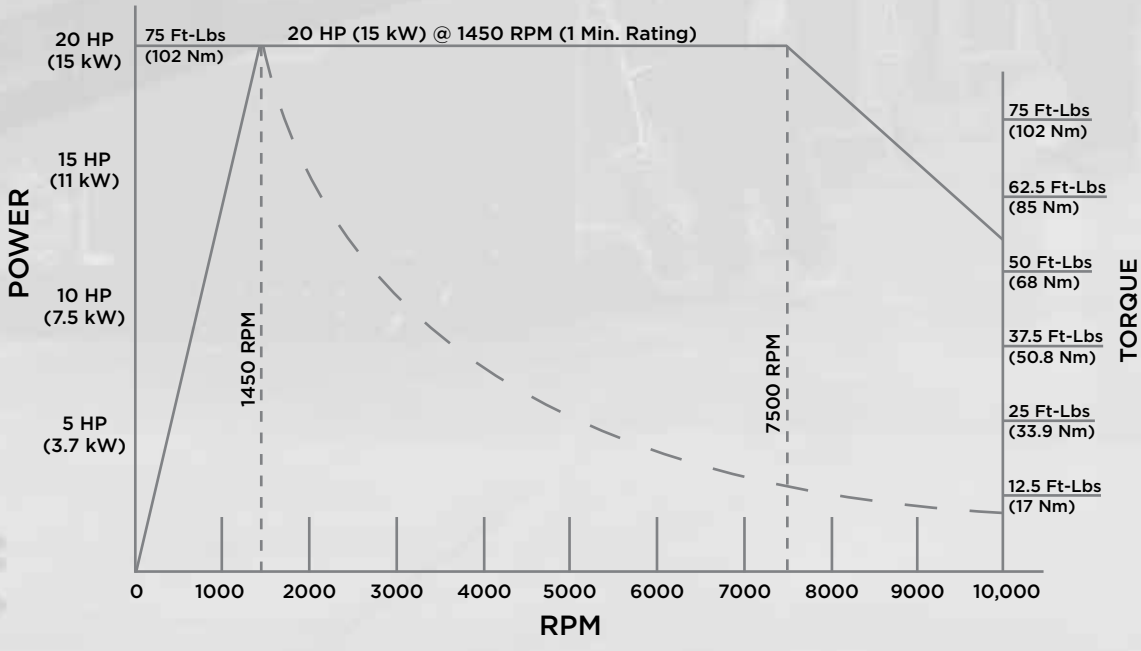

Support ONE is a core value that drives every Milltronics employee from top management to our newest team member. It's the driving philosophy that inspires us to continually work closely with our distribution partners innovating new ways to seamlessly surround manufacturers and machine shop owners with the reliable full life-cycle support they need to make great products.

SUPPORT ONE

DISCOVER · SPECIFY · QUOTE · DELIVER · INSTALL · TRAIN · FOLLOW-UP · SUPPORT

Milltronics Headquarters located in Waconia, Minnesota USA

Check out Milltronics full product line and service offering at www.milltronics.com

- Slant Bed Turning Centers
- Combination Lathes
- Horizontal Boring Machine
- Toolroom Machining Centers
- 50 Taper Box Way Vertical Machining Centers
- Bridge Mills
- Rigid Head Toolroom Bed Mills
- 40 and 50 Taper Belted Linear Way Machining Centers
- 40 Taper Inline Linear Way Machining Centers
- Service
- Parts
- Repair
- Training
- Applications

Milltronics USA, Inc. | 1400 Mill Lane, Waconia, MN 55387 USA | 888-999-1440 | sales@milltronics.com | www.milltronics.com

Every effort has been made to represent our products fairly and correctly. However, Milltronics USA reserves the right to amend or change any part of this catalog without notice and without incurring obligation. © 2016

Rev VMGP 2016-04.1